Crown®

Pressure regulator for semiconductor manufacturing process

e-flow®

for high purity process

PRODUCTS CATALOGUE

YUTAKA®

The First Name in Performance.
The Last Word in High Purity.

YUTAKA ENGINEERING CORPORATION, better known as Crown, was founded in 1956 by President and CEO, Yoshitake Toyokawa. Yoshitake's objectives were to provide products with sincerity, enthusiasm and originality from a company with excellent service and technical support. These goals have continued to guide the company throughout the years.

In 1956, YUTAKA began producing pressure regulators and flowmeters intended solely for the general industry. These products were designed and manufactured exclusively for the welding gas applications. In 1980, the company's efforts have remained focused on meeting the ever changing needs of the high purity applications. Our products designs and manufacturing techniques are constantly evolving to meet the future challenges of the industry's next generation requirements at a competitive price. The product line continues to grow year by year with additional innovative components which compliment our offering.

Today, YUTAKA continues to strive towards our goals. We are still working to improve our already high standards of quality, performance and reliability backed by service and support.

For the Hi-Technology

e-flow
for high purity process

▲Head Office in Tokyo

▲Matsumoto Factory

▲Integrated Gas System

Selection Table by Pressure and Flow Rate

e-flow
for high purity process

	L Series		R Series		D Series	
	For Cylinder	For Point of Use	For Cylinder	For Point of Use	For Cylinder	For Point of Use
High Flow (More than 400NL/min)	L61 L62	LL2 LL1 LM1 LM2 LH1 LH2	R61	RH1 RH2 RLD		LM2-D RH2-D
Medium Flow (100～400NL/min)	L88	L35	R72	R35 R36		RH2-D
Standard Flow (10～100NL/min)	L20 L21 L81	L25 L26 L18 L18H	R20 R81	R25 R26		
Small Flow (Less than 10NL/min)		L96 (Absolute Pressure)				

[NOTE]

- Product availability and specifications contained herein are subject to change without notice. Consult local distributor or factory for potential revisions.
- To complete ordering information, select “SS” or “SH” in the “MATERIAL” category.
- Seat Materials: Special fluoroplastics are recommended for Chlorine (Cl_2) service.
- Seat Materials: Vespel® is recommended for Nitrous Oxide(N_2O) service.
- Stainless steel internals are recommended for Carbon Monoxide (CO) or Nickel Carbonyl service.
- Crown/YUTAKA® and e-flow® are registered trademarks of YUTAKA ENGINEERING CORPORATION.
- Hastelloy® is a registered trademark of Haynes International, Inc.
- Vespel® and VITON® are registered trademarks of DuPont Company.
- S-VCR®, VCR® and Swagelok® are registered trademarks of Swagelok Marketing CO.
- S-JSK® and JSK® are registered trademarks of SANKO KOGYO CO., LTD.
- UJR® is a registered trademark of Fujikin Incorporated.
- When selecting a regulator, the total system design must be considered to assure safe, trouble-free regulator performance. Regulator function, materials compatibility, adequate ratings, proper installation, operation and maintenance are the responsibility of the system designer and user.
- Custom fittings, porting, testing and dimension options are also available upon customer request.
- Do not mix or interchange parts with those of other manufacturers.

L20 Series

RoHS Directive Products

High Pressure Regulator

Inlet Pressure	Max.24 MPaG (Max.3,480 PSIG)
Outlet Pressure	Max.0.99 MPaG (Max.144 PSIG) (Pressure Range: 0~0.2 MPa, 0~0.4 MPa, 0~0.6 MPa, 0~0.99 MPa)
Supply Pressure Effect	0.00021 MPaG (0.03 PSIG) per 0.1 MPaG (14.5 PSIG)
Proof Pressure	31.5 MPa (4,567 PSI), 1.5 MPa (Outlet Side)
CV	0.09
Temperature	–10℃ to +40℃
Outboard Leakage	1×10^{-11} Pa・m^3/sec・He (1×10^{-10} atm・cc/sec・He)
Internal Volume	4.67 cc (0.28 in^3) w/o fittings
Approximate weight	1.29 kg (2 lbs.14 oz.)
Installation	Threaded holes on the rear surface or Panel mounting

[NOTE]
1MPa = 10.2 kgf/cm^2 = 145.04 PSI
1MPa = 7504.36 mmHg = 295.4 inHg

Cross sectional drawing

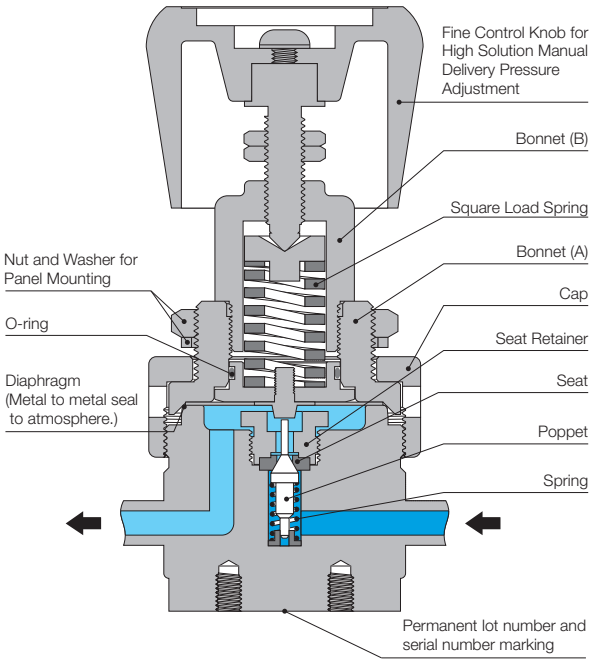

[NOTE]
- Avoid turning the control knob excessively.
- Series L25,L26 are recommended for Choroline (CL_2) service and Nitrous Oxide (N_2O) service.
- No filter in this unit.

Tied Diaphragm (Optional)

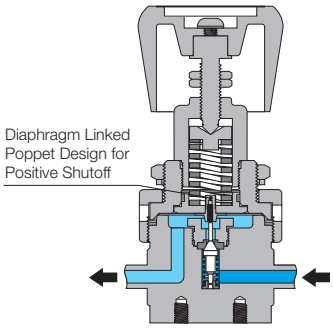

[NOTE]
Operating the Tied Diaphragm Type: In order to minimize premature wear of regulator's internal parts. Be sure not to close regulator while under pressure.

Flow characteristics

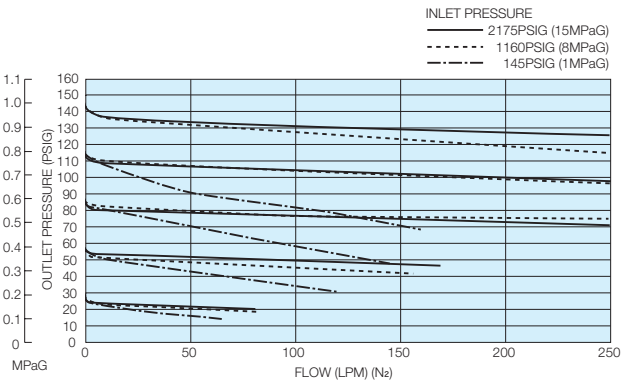

[NOTE]
- These tests were performed at ambient conditions.

Outline drawing

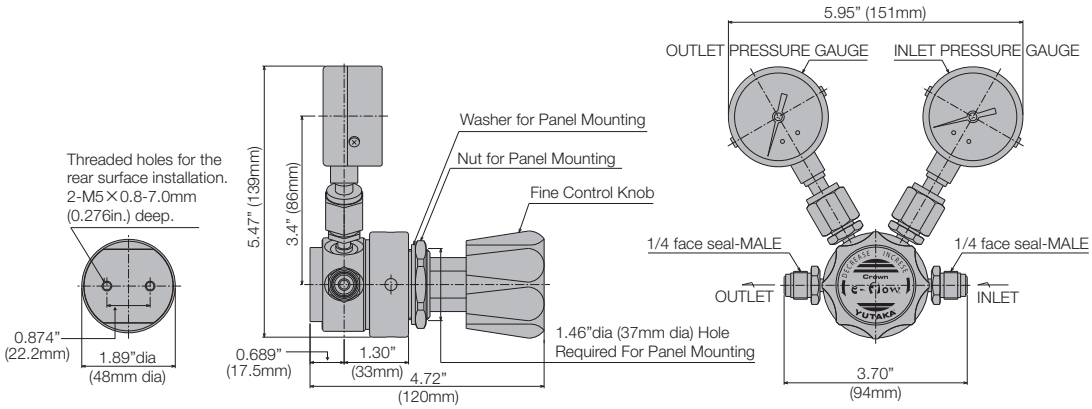

[NOTE]
- Dimensions are in inches and (mm) for reference only.
- Face to face length of the male and female are the same.
- Subject to change without notice.

Materials of construction

MODEL & TYPE	L20SS	L20SH	L20SS-CO
Wetted Parts			
Body	SUS316L		
Poppet & Seat Retainer	SUS316L	Hastelloy® C-22	SUS316L
Diaphragm	Hastelloy® C-22		SUS316L
Seat	PCTFE		
Spring	SUS316	Hastelloy® C-22	SUS316
Gasket to seal for gauge	Ni		SUS316
Non-wetted Parts			
Bonnet (A)	SUS316		
Bonnet (B)	Nickel Plated Brass		
Cap	SUS304		
Control Knob	ABS Resin		
O-ring	NBR		

Wetted surface finishes

Standard Ra (GRADE "B")	32μin. (0.80μm) or less
Optional Ra (GRADE "A")	7μin. (0.18μm) or less

Standard connections

1/4" face to face length of the male and female are the same. 3.70in. (94mm)
1/4" Tube stubs and other connections available as options.

[NOTE]
- Any combination of Face Seal male and/or female fittings are available for inlet and outlet.
- Size and configuration of pressure gauge port is 1/4" Face Seal male.

Ordering information

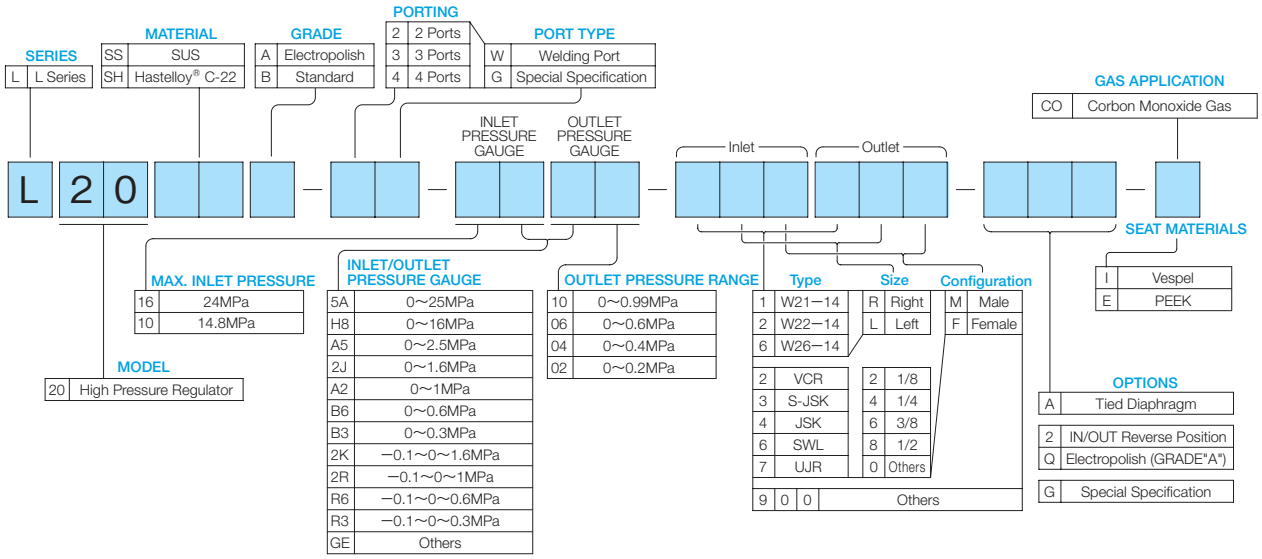

L25 Series

RoHS Directive Products

Point-of-Use Pressure Regulator

Inlet Pressure	Max.6 MPaG (Max.870 PSIG)
Outlet Pressure	Max.0.99 MPaG (Max.144 PSIG) (Pressure Range: 0~0.2 MPa, 0~0.4 MPa, 0~0.6 MPa, 0~0.99 MPa)
Supply Pressure Effect	0.0008 MPaG (0.12 PSIG) per 0.1 MPaG (14.5 PSIG)
Proof Pressure	22.2 MPa (3,215 PSI)
CV	0.15
Temperature	–10℃ to +40℃
Outboard Leakage	1×10^{-11} Pa・m^3/sec・He (1×10^{-10} atm・cc/sec・He)
Internal Volume	4.67 cc (0.28 in^3) w/o fittings
Approximate weight	0.96 kg (2 lbs. 2 oz.)
Installation	Threaded holes on the rear surface or Panel mounting

[NOTE]
1MPa = 10.2 kgf/cm^2 = 145.04 PSI
1MPa = 7504.36 mmHg = 295.4 inHg

Cross sectional drawing

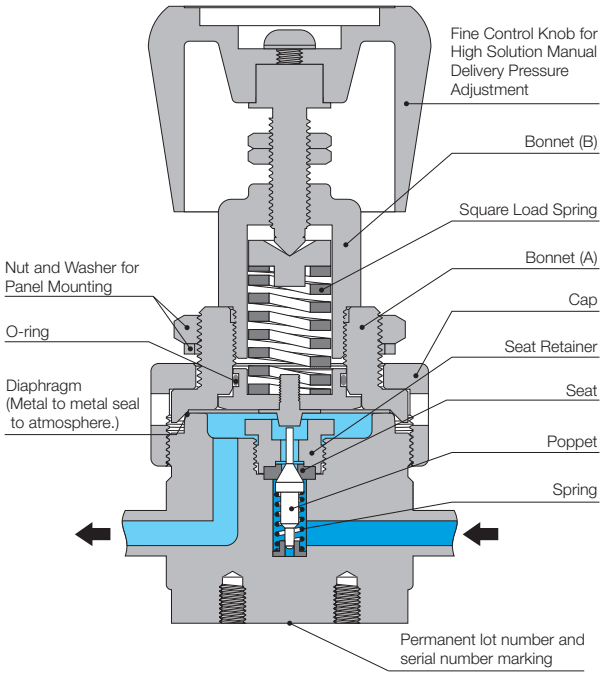

[NOTE]
- Avoid turning the control knob excessively.
- For purging at 870 PSIG (6 MPaG) and higher, operate the unit in consideration of changing the outlet pressure by the supply pressure effect.
- No filter in this unit.

Tied Diaphragm (Optional)

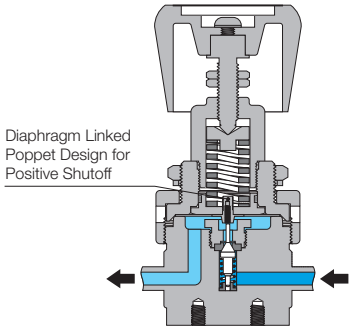

[NOTE]
Operating the Tied Diaphragm Type: In order to minimize premature wear of regulator's internal parts. Be sure not to close regulator while under pressure.

Flow characteristics

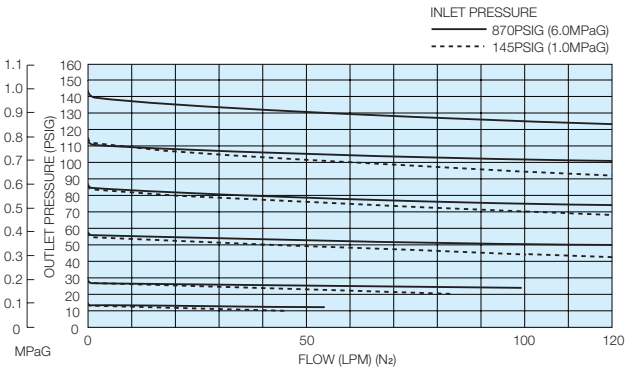

[NOTE]
- These tests were performed at ambient conditions.

Outline drawing

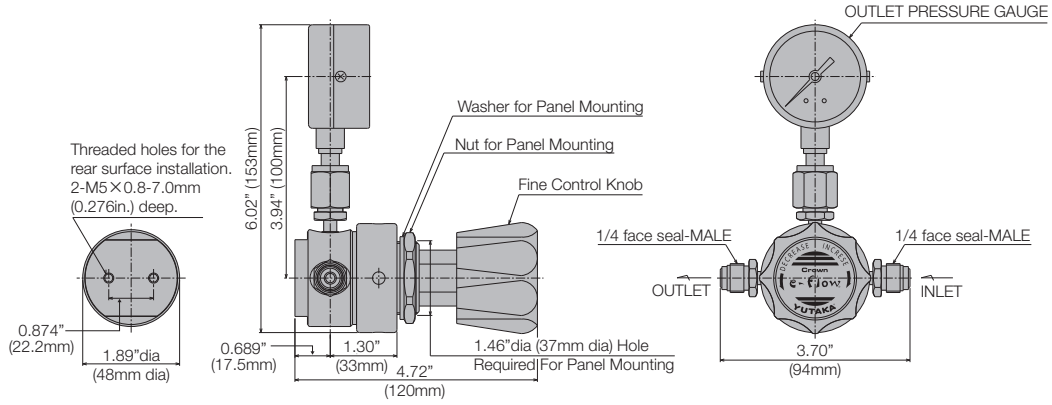

[NOTE]
- Dimensions are in inches and (mm) for reference only.
- Face to face length of the male and female are the same.
- Subject to change without notice.

Materials of construction

MODEL & TYPE	L25SS	L25SH	L25SH-CL2	L25SS-N2O	L25SS-CO	L25SS-NH3
Wetted Parts						
Body	SUS316L					
Poppet & Seat Retainer	SUS316L	Hastelloy® C-22		SUS316L		
Diaphragm	Hastelloy® C-22				SUS316L	Hastelloy® C-22
Seat	PCTFE		Special Fluoroplastics	Vespel®	PCTFE	Special Fluoroplastics
Spring	SUS316	Hastelloy® C-22		SUS316		
Gasket to seal for gauge	Ni				SUS316	Ni
Non-wetted Parts						
Bonnet (A)	SUS316					
Bonnet (B)	Nickel Plated Brass					
Cap	SUS304					
Control Knob	ABS Resin					
O-ring	NBR					

Wetted surface finishes

Standard Ra (GRADE "B")	32μin. (0.80μm) or less
Optional Ra (GRADE "A")	7μin. (0.18μm) or less

Standard connections

1/4" face to face length of the male and female are the same. 3.70in. (94mm)
1/4" Tube stubs and other connections available as options.

[NOTE]
- Any combination of Face Seal male and/or female fittings are available for inlet and outlet.
- Size and configuration of pressure gauge port is 1/4" Face Seal male.

Ordering information

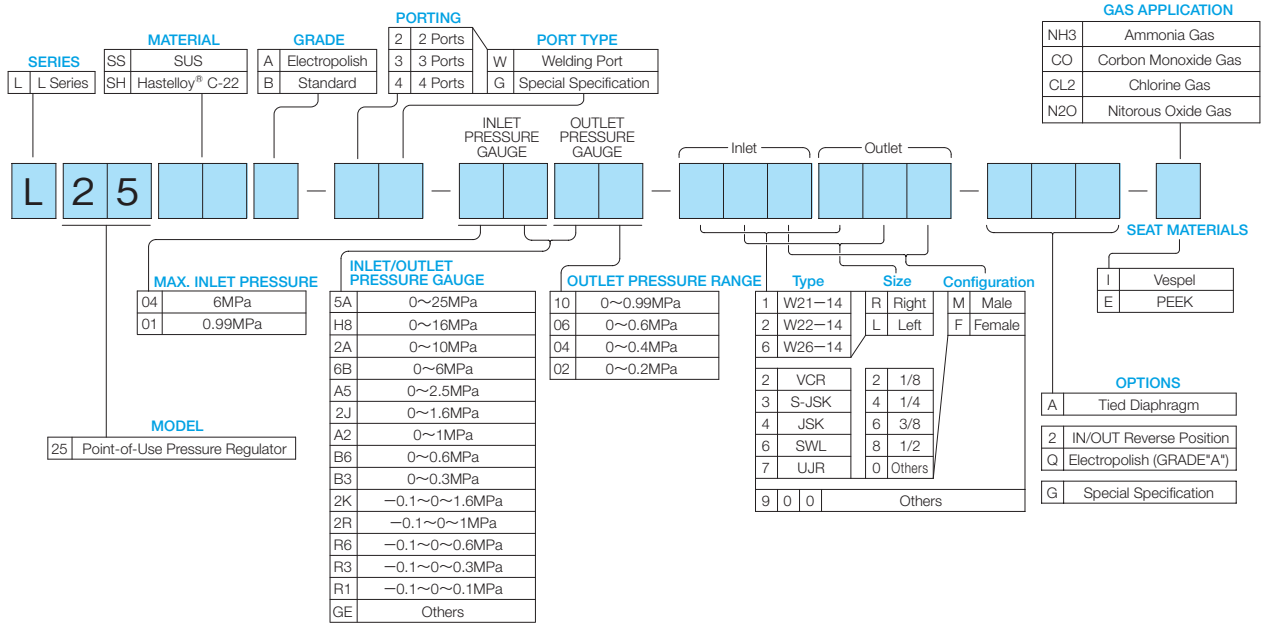

L21 Series

RoHS Directive Products

High Pressure Regulator

Inlet Pressure	Max.24 MPaG (Max.3,480 PSIG)
Outlet Pressure	Max.0.99 MPaG (Max.144 PSIG) (Pressure Range: 0～0.2 MPa, 0～0.4 MPa, 0～0.6 MPa, 0～0.99 MPa)
Supply Pressure Effect	0.0005 MPaG (0.0725 PSIG) per 0.1 MPaG (14.5 PSIG)
Proof Pressure	31.5 MPa (4,567 PSI), 1.5 MPa (Outlet Side)
CV	0.09
Temperature	–10℃ to +40℃
Outboard Leakage	1×10^{-11} Pa・m^3/sec・He (1×10^{-10} atm・cc/sec・He)
Internal Volume	4.75 cc (0.29 in^3) w/o fittings
Approximate weight	1.4 kg (3 lbs. 1 oz.)
Installation	Threaded holes on the rear surface or Panel mounting

[NOTE]
1MPa = 10.2 kgf/cm^2 = 145.04 PSI
1MPa = 7504.36 mmHg = 295.4 inHg

Cross sectional drawing

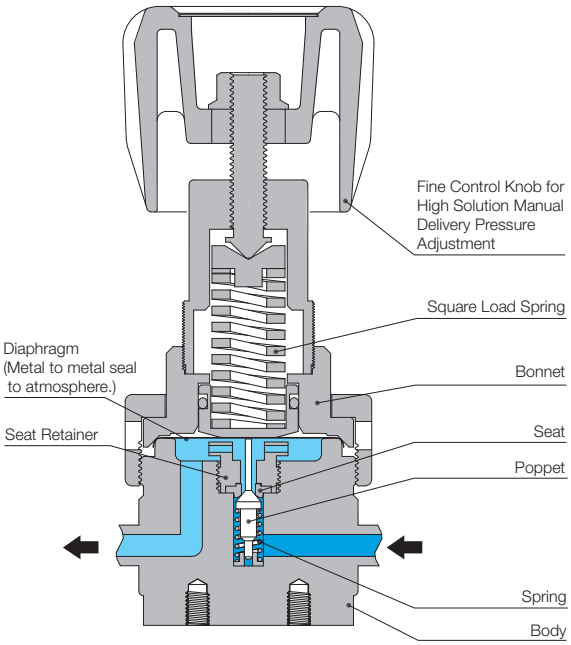

[NOTE]
- Avoid turning the control knob excessively.
- Series L25,L26 are recommended for Choline (CL_2) service and Nitrous Oxide (N_2O) service.
- No filter in this unit.

Flow characteristics

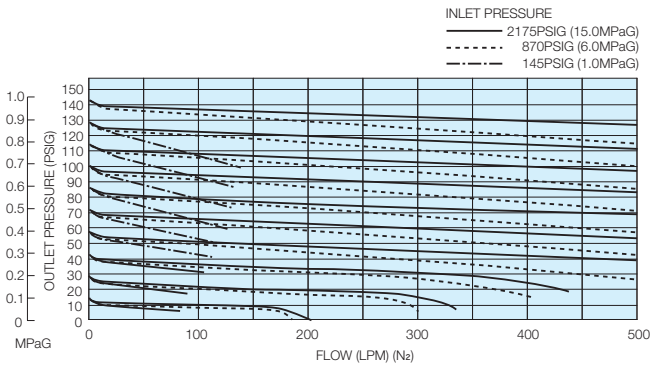

[NOTE]
- These tests were performed at ambient conditions.

Outline drawing

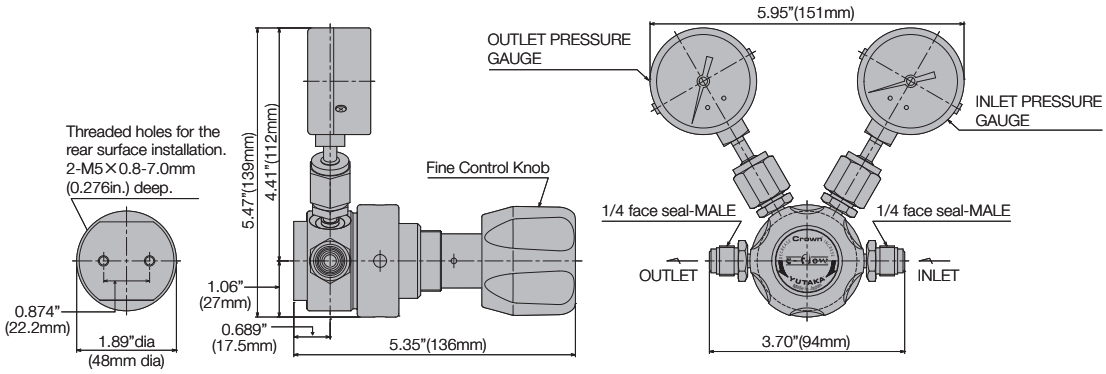

[NOTE]
- Dimensions are in inches and (mm) for reference only.
- Face to face length of the male and female are the same.
- Subject to change without notice.

Materials of construction

MODEL & TYPE	L21SS	L21SH	L21SS-CO
Wetted Parts			
Body	SUS316L		
Poppet & Seat Retainer	SUS316L	Hastelloy® C-22	SUS316L
Diaphragm	Hastelloy® C-22		SUS316L
Seat	PCTFE		
Spring	SUS316	Hastelloy® C-22	SUS316
Gasket to seal for gauge	Ni		SUS316
Non-wetted Parts			
Bonnet	SUS316, C3604BD		
Control Knob	ABS Resin		
O-ring	NBR		

Wetted surface finishes

Standard Ra (GRADE "B")	32μin. (0.80μm) or less
Optional Ra (GRADE "A")	7μin. (0.18μm) or less

Standard connections

1/4" face to face length of the male and female are the same. 3.70in. (94mm)
1/4" Tube stubs and other connections available as options.

[NOTE]
- Any combination of Face Seal male and/or female fittings are available for inlet and outlet.
- Size and configuration of pressure gauge port is 1/4" Face Seal male.

Ordering information

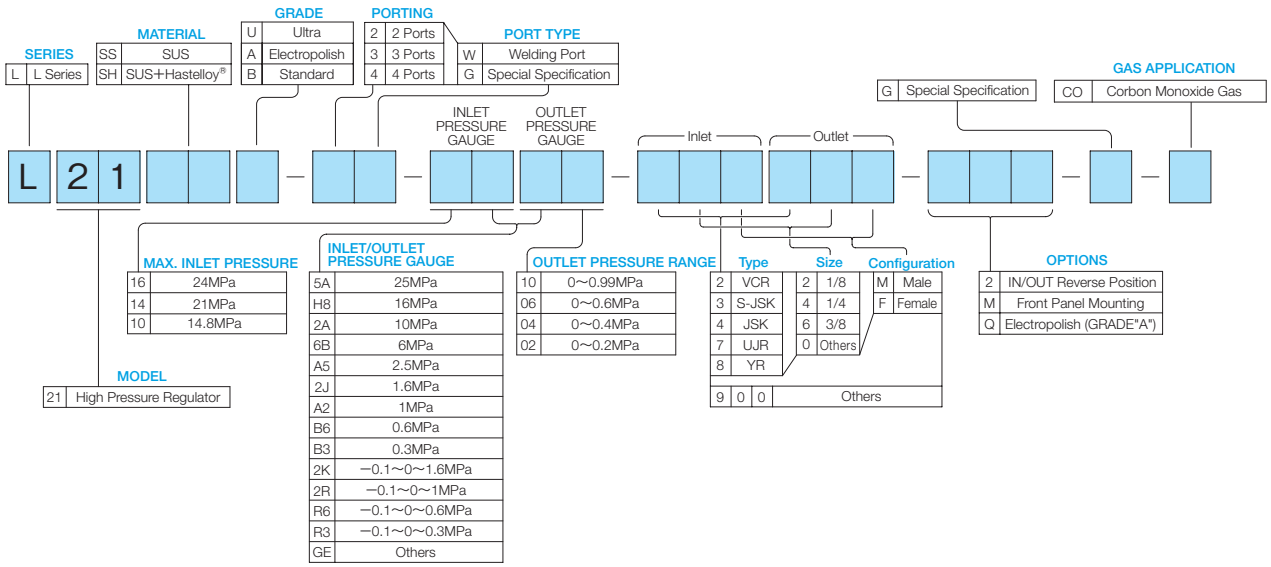

L26 Series

RoHS Directive Products

Point-of-Use Pressure Regulator

Inlet Pressure	Max.6 MPaG (Max.870 PSIG)
Outlet Pressure	Max.0.99 MPaG (Max.140 PSIG) (Pressure Range: 0~0.2 MPa, 0~0.4 MPa, 0~0.6 MPa, 0~0.99 MPa)
Supply Pressure Effect	0.001 MPaG (0.145 PSIG) per 0.1 MPaG (14.5 PSIG)
Proof Pressure	22.2 MPa (Inlet side)
CV	0.21
Temperature	–10℃ to +40℃
Outboard Leakage	1×10^{-11} Pa・m^3/sec・He (1×10^{-10} atm・cc/sec・He)
Internal Volume	4.75 cc (0.29 in^3) w/o fittings
Approximate weight	1.0 kg (2 lbs. 3 oz.)
Installation	Threaded holes on the rear surface or Panel mounting

[NOTE]
1MPa = 10.2 kgf/cm^2 = 145.04 PSI
1MPa = 7504.36 mmHg = 295.4 inHg

Cross sectional drawing

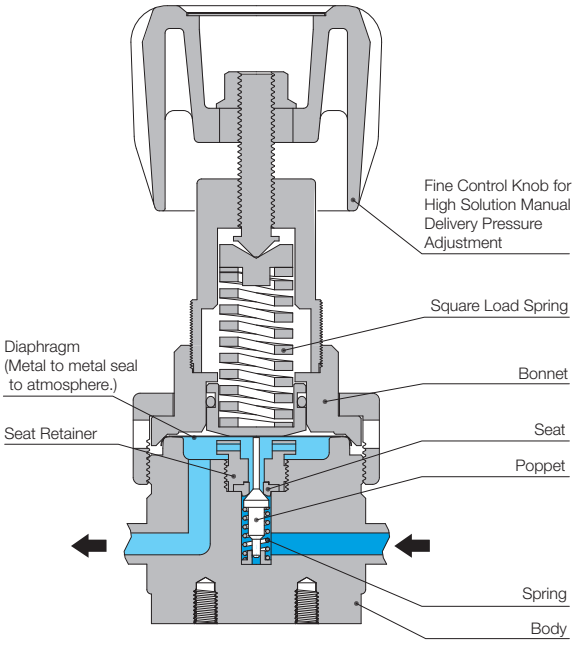

[NOTE]
・Avoid turning the control knob excessively.
・No filter in this unit.

Flow characteristics

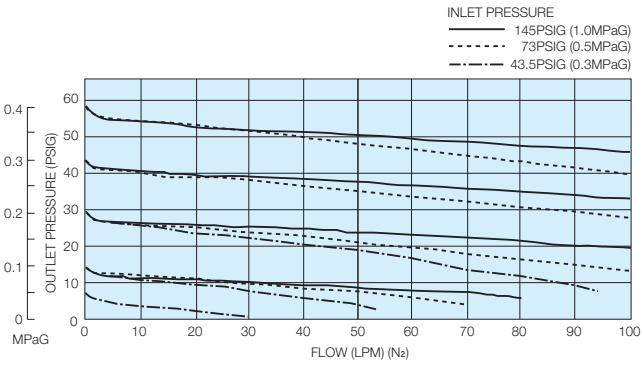

[NOTE]
・These tests were performed at ambient conditions.

Outline drawing

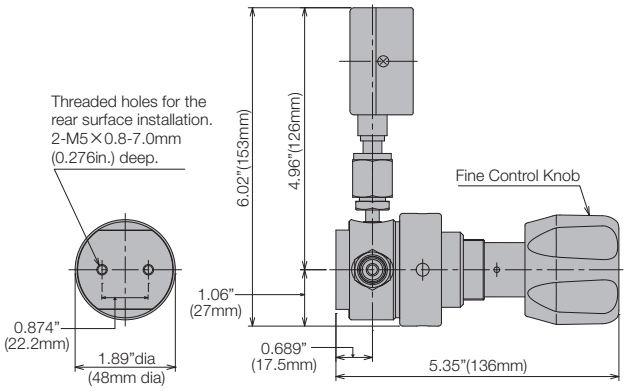

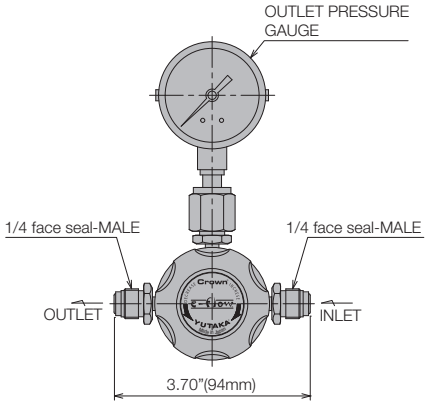

[NOTE]
- Dimensions are in inches and (mm) for reference only.
- Face to face length of the male and female are the same.
- Subject to change without notice.

Materials of construction

MODEL & TYPE	L26SS	L26SH	L26SH-CL2	L26SS-N2O	L26SS-CO	L26SS-NH3
Wetted Parts						
Body	SUS316L					
Poppet & Seat Retainer	SUS316L	Hastelloy® C-22		SUS316L		
Diaphragm	Hastelloy® C-22				SUS316L	Hastelloy® C-22
Seat	PCTFE		Special Fluoroplastics	Vespel®	PCTFE	Special Fluoroplastics
Spring	SUS316	Hastelloy® C-22		SUS316		
Gasket to seal for gauge	Ni				SUS316	Ni
Non-wetted Parts						
Bonnet	SUS304					
Control Knob	ABS Resin					
O-ring	NBR					

Wetted surface finishes

Standard Ra (GRADE "B")	32μin. (0.80μm) or less
Optional Ra (GRADE "A")	7μin. (0.18μm) or less

Standard connections

1/4" face to face length of the male and female are the same. 3.70in. (94mm)
1/4" Tube stubs and other connections available as options.

[NOTE]
- Any combination of Face Seal male and/or female fittings are available for inlet and outlet.
- Size and configuration of pressure gauge port is 1/4" Face Seal male.

Ordering information

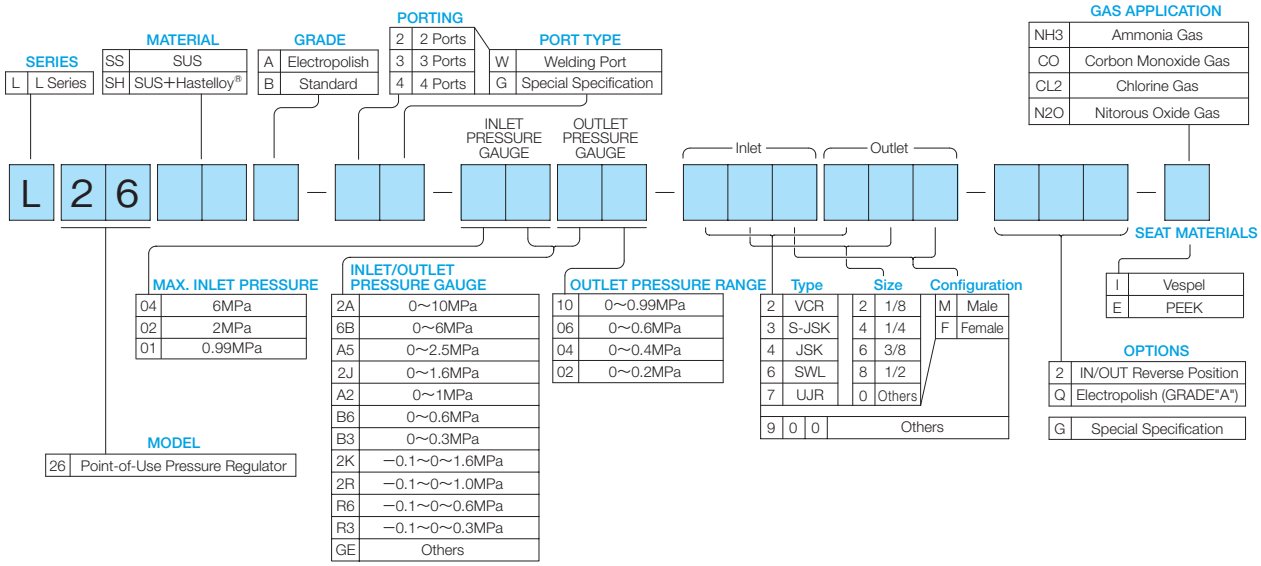

L35 Series

RoHS Directive Products

Medium Flow Rate Applications

Inlet Pressure	Max.6 MPaG (Max.870 PSIG)
Outlet Pressure	Max.0.9 MPaG (Max.130.5 PSIG) (Pressure Range: 0～0.2 MPa, 0～0.4 MPa, 0～0.6 MPa, 0～0.9 MPa)
Supply Pressure Effect	0.0007 MPaG (0.10 PSIG) per 0.1 MPaG (14.5 PSIG)
Proof Pressure	9 MPa (1,305 PSI)
CV	0.21
Temperature	–10℃ to +40℃
Outboard Leakage	1×10^{-11} Pa・m^3/sec・He (1×10^{-10} atm・cc/sec・He)
Internal Volume	11.3 cc (0.68 in^3) w/o fittings
Approximate weight	1.95 kg (4 lbs. 5 oz.)
Installation	Threaded holes on the rear surface or Panel mounting

[NOTE]
1MPa = 10.2 kgf/cm^2 = 145.04 PSI
1MPa = 7504.36 mmHg = 295.4 inHg

Cross sectional drawing

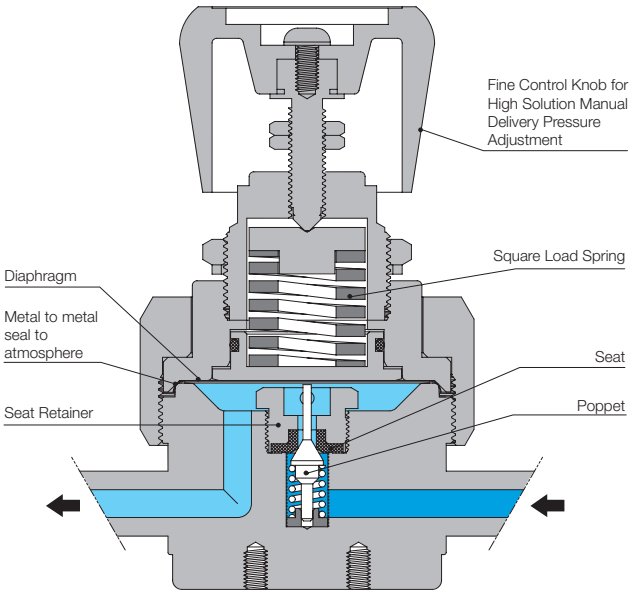

[NOTE]
・Avoid turning the control knob excessively.
・No filter in this unit.

Flow characteristics

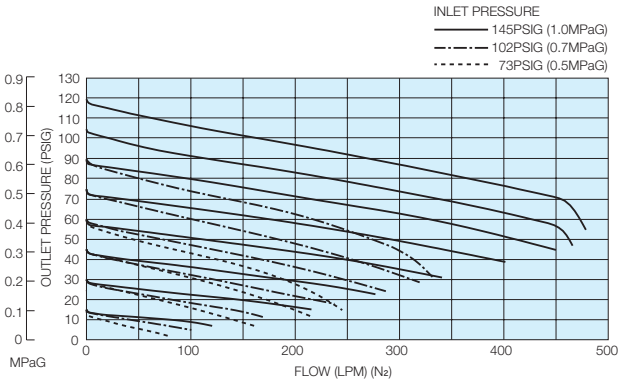

[NOTE]
・These tests were performed at ambient conditions.

Outline drawing

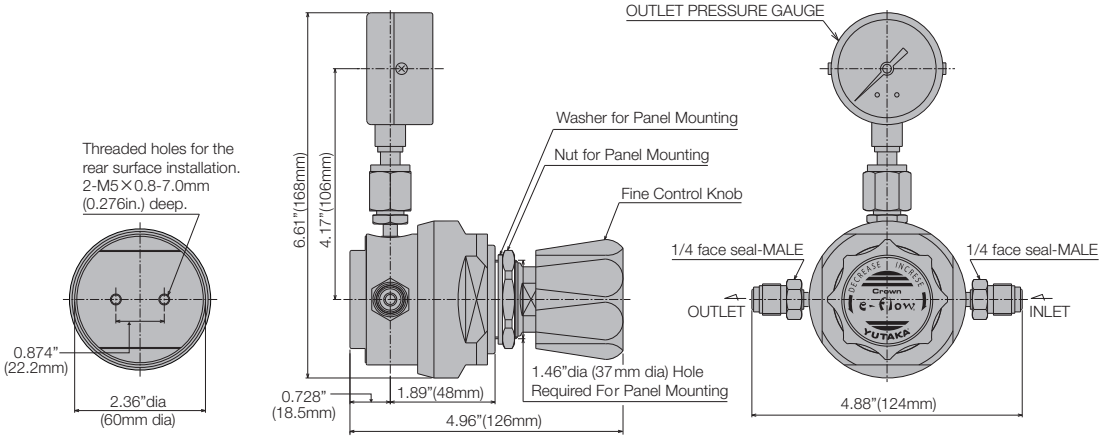

[NOTE]
- Dimensions are in inches and (mm) for reference only.
- Face to face length of the male and female are the same.
- Subject to change without notice.

Materials of construction

MODEL & TYPE	L35SS	L35SH	L35SH-CL2	L35SS-N2O	L35SS-CO	L35SS-NH3
Wetted Parts						
Body	SUS316L					
Poppet & Seat Retainer	SUS316L	Hastelloy® C-22		SUS316L		
Diaphragm	Hastelloy® C-22				SUS316L	Hastelloy® C-22
Seat	PCTFE		Special Fluoroplastics	Vespel®	PCTFE	Special Fluoroplastics
Spring	SUS316					
Gasket to seal for gauge	Ni				SUS316	Ni
Non-wetted Parts						
Bonnet	SUS304					
Control Knob	ABS Resin					
O-ring	NBR					

Wetted surface finishes

Standard Ra (GRADE "B")	32μin. (0.80μm) or less
Optional Ra (GRADE "A")	7μin. (0.18μm) or less

Standard connections

1/4" face to face length of the male and female are the same. 4.88in. (124mm)
1/4" Tube stubs and other connections available as options.
3/8", 1/2" face to face length of the male and female are the same. 5.2in. (132mm)

[NOTE]
- Any combination of Face Seal male and/or female fittings are available for inlet and outlet.
- Size and configuration of pressure gauge port is 1/4" Face Seal male.

Ordering information

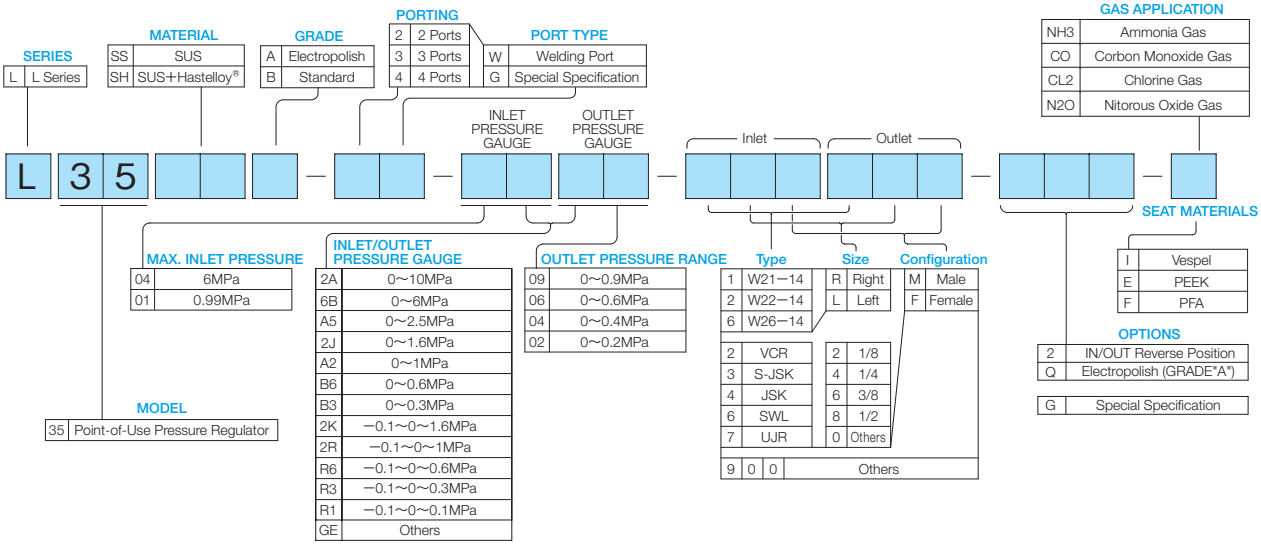

L61 Series

RoHS Directive Products

High Flow Rate Applications

Inlet Pressure	Max.24 MPaG (Max.3,480 PSIG)
Outlet Pressure	Max.0.8 MPaG (Max.116 PSIG) (Pressure Range: 0~0.2 MPa, 0~0.4 MPa, 0~0.6 MPa, 0~0.8 MPa)
Supply Pressure Effect	0.0006 MPaG (0.087 PSIG) per 0.1 MPaG (14.5 PSIG)
Proof Pressure	31.5 MPa (4,567 PSI), 1.5 MPa (Outlet Side)
CV	0.07
Temperature	–10℃ to +40℃
Outboard Leakage	1×10^{-11} Pa・m^3/sec・He (1×10^{-10} atm・cc/sec・He)
Internal Volume	32.3 cc (1.97 in^3) w/o fittings
Approximate weight	4.7 kg (10 lbs. 6 oz.)
Installation	Threaded holes on the rear surface or Panel mounting

[NOTE]
1MPa = 10.2 kgf/cm^2 = 145.04 PSI
1MPa = 7504.36 mmHg = 295.4 inHg

Cross sectional drawing

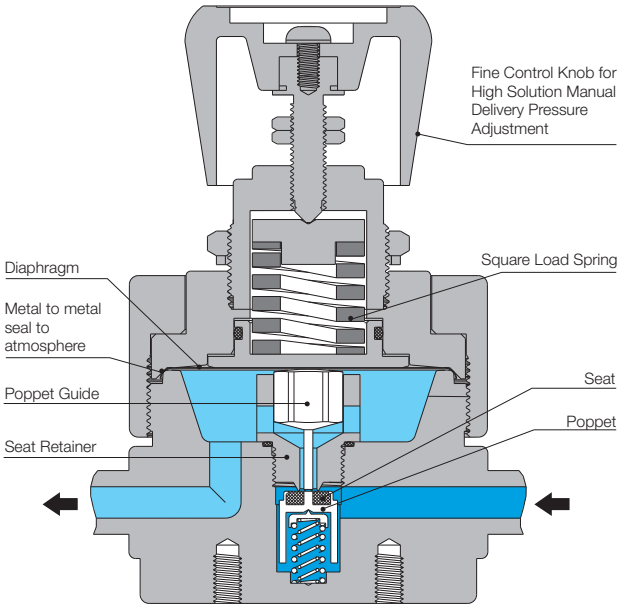

[NOTE]
・Avoid turning the control knob excessively.
・No filter in this unit.

Flow characteristics

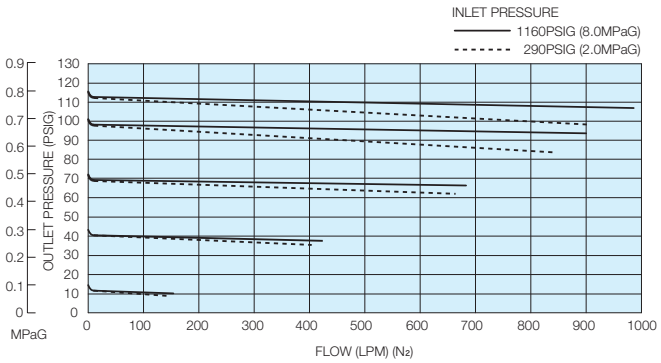

[NOTE]
・These tests were performed at ambient conditions.

Outline drawing

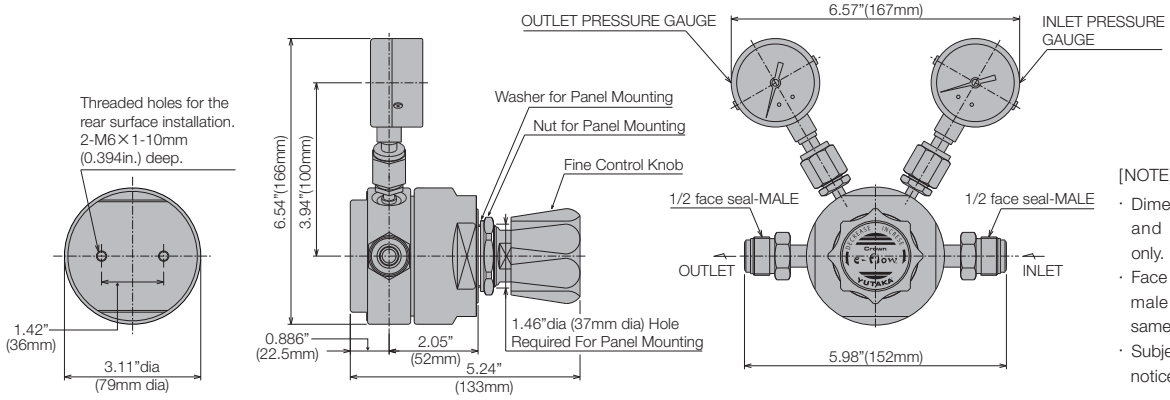

[NOTE]
- Dimensions are in inches and (mm) for reference only.
- Face to face length of the male and female are the same.
- Subject to change without notice.

Materials of construction

MODEL & TYPE	L61SS	L61SH	L61SS-CO
Wetted Parts			
Body	SUS316L		
Poppet	SUS316	Hastelloy® C-22	SUS316
Seat Retainer	SUS316L	Hastelloy® C-22	SUS316L
Diaphragm	Hastelloy® C-22		SUS316L
Seat	PCTFE		
Spring	SUS316		
Gasket to seal for gauge	Ni		SUS316
Non-wetted Parts			
Bonnet	SUS304		
Control Knob	ABS Resin		
O-ring	NBR		

Wetted surface finishes

Standard Ra (GRADE "B")	32μin. (0.80μm) or less
Optional Ra (GRADE "A")	7μin. (0.18μm) or less

Standard connections

1/4" face to face length of the male and female are the same. 4.96in. (126mm)
1/4" Tube stubs and other connections available as options.
3/8", 1/2" face to face length of the male and female are the same. 5.98in. (152mm)

[NOTE]
- Any combination of Face Seal male and/or female fittings are available for inlet and outlet.
- Size and configuration of pressure gauge port is 1/4" Face Seal male.

Ordering information

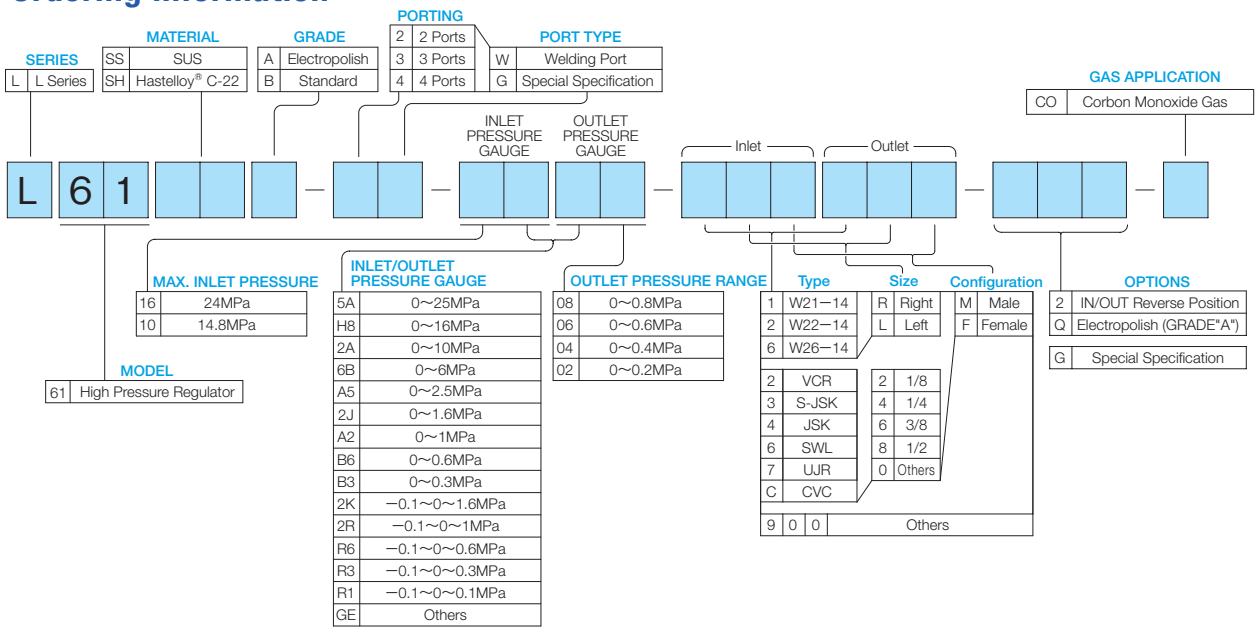

L62 Series

RoHS Directive Products

High Flow Rate Applications (Needle Type)

Inlet Pressure	Max.24 MPaG (Max.3,480 PSIG)
Outlet Pressure	Max.0.8 MPaG (Max.116 PSIG) (Pressure Range: 0~0.2 MPa, 0~0.4 MPa, 0~0.6 MPa, 0~0.8 MPa)
Supply Pressure Effect	0.001 MPaG (0.145 PSIG) per 0.1 MPaG (14.5 PSIG)
Proof Pressure	31.5 MPa (4,567 PSIG)
CV	0.11
Temperature	–10℃ to +40℃
Outboard Leakage	1×10^{-11} Pa・m^3/sec・He (1×10^{-10} atm・cc/sec・He)
Internal Volume	32.3 cc (1.97 in^3) w/o fittings
Approximate weight	4.7 kg (10 lbs. 6 oz.)
Installation	Threaded holes on the rear surface or Panel mounting

[NOTE]
1MPa = 10.2 kgf/cm^2 = 145.04 PSI
1MPa = 7504.36 mmHg = 295.4 inHg

Cross sectional drawing

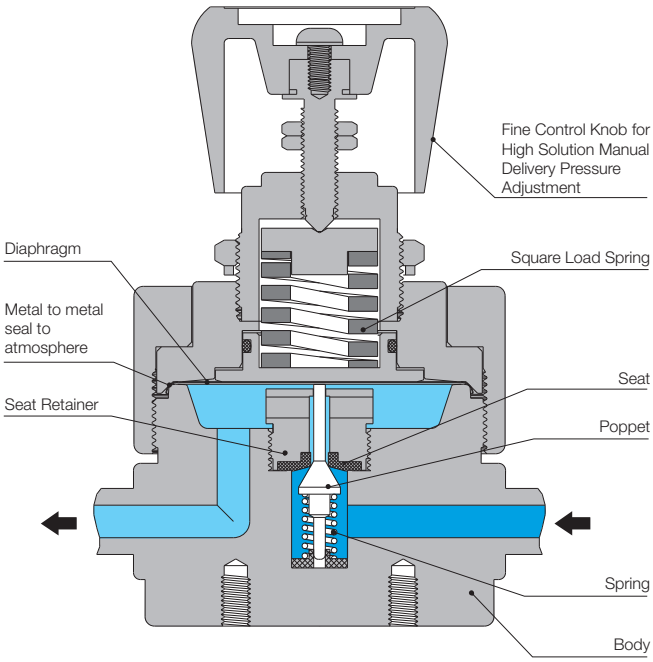

[NOTE]
・Avoid turning the control knob excessively.
・No filter in this unit.

Flow characteristics

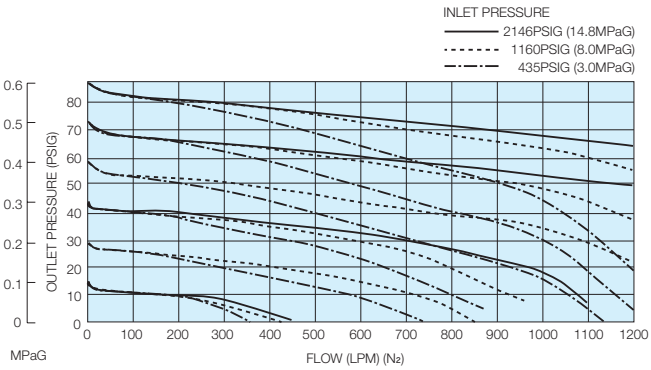

[NOTE]
・These tests were performed at ambient conditions.

Outline drawing

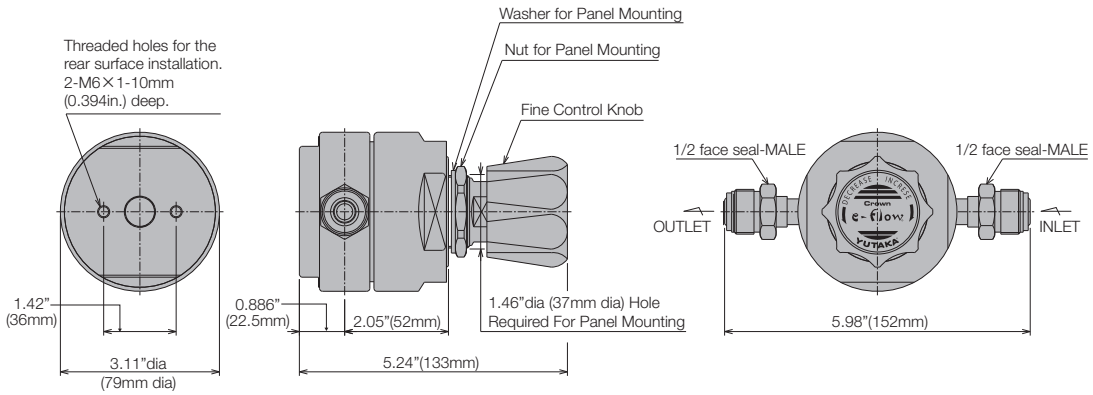

[NOTE]
- Dimensions are in inches and (mm) for reference only.
- Face to face length of the male and female are the same.
- Subject to change without notice.

Materials of construction

MODEL & TYPE	L62SS	L62SH	L62SS-CO	L62SS-I
Wetted Parts				
Body	SUS316L			
Poppet & Seat Retainer	SUS316L	Hastelloy® C-22	SUS316L	
Diaphragm	Hastelloy® C-22		SUS316L	Hastelloy® C-22
Seat	PCTFE			Vespel®
Spring	SUS316			
Gasket to seal for gauge	Ni		SUS316	Ni
Non-wetted Parts				
Bonnet	SUS304			
Control Knob	ABS Resin			
O-ring	NBR			

Wetted surface finishes

Standard Ra (GRADE "B")	32μin. (0.80μm) or less
Optional Ra (GRADE "A")	7μin. (0.18μm) or less

Standard connections

3/8", 1/2" face to face length of the male and female are the same. 5.98in. (152mm)

[NOTE]
- Any combination of Face Seal male and/or female fittings are available for inlet and outlet.
- Size and configuration of pressure gauge port is 1/4" Face Seal male.

Ordering information

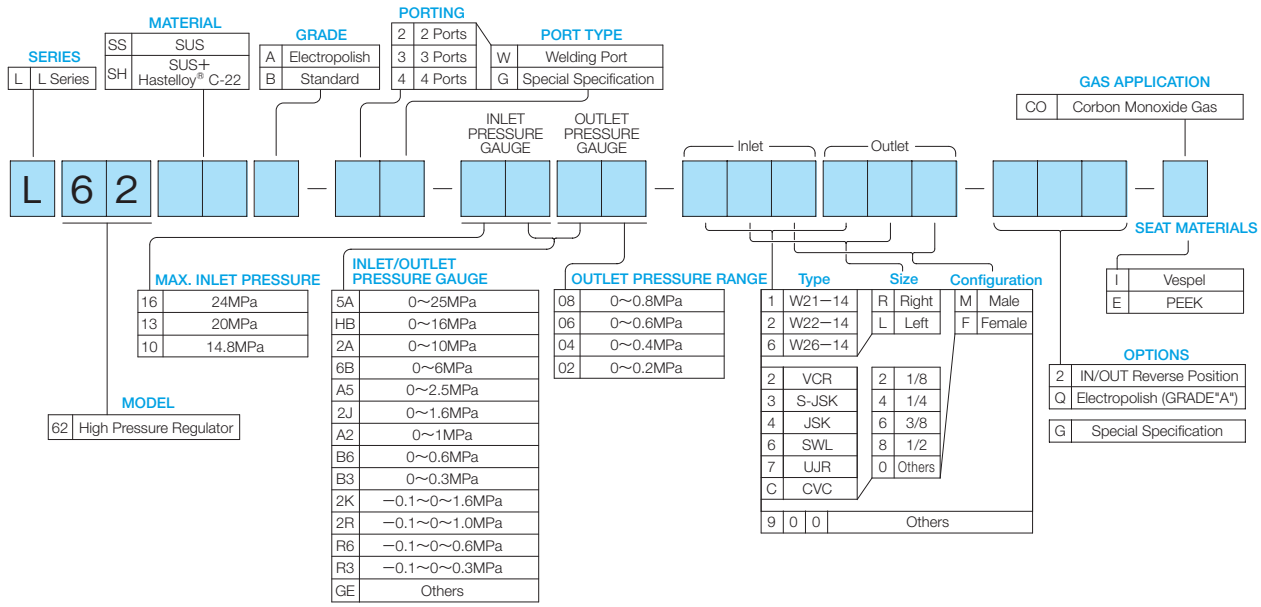

L81 Series

RoHS Directive Products

High Pressure Regulator

Inlet Pressure	Max.24 MPaG (Max.3,480 PSIG)
Outlet Pressure	Max.0.8 MPaG (Max.116 PSIG) (Pressure Range: 0~0.2 MPa, 0~0.4 MPa, 0~0.6 MPa, 0~0.8 MPa)
Supply Pressure Effect	0.000007 MPaG (0.10 PSIG) per 0.1 MPaG (14.5 PSIG)
Proof Pressure	31.5 MPa (4,567 PSIG)
CV	0.03
Temperature	–10℃ to +40℃
Outboard Leakage	1×10^{-11} Pa・m^3/sec・He (1×10^{-10} atm・cc/sec・He)
Internal Volume	8.9 cc (0.54 in^3) w/o fittings
Approximate weight	2.0 kg (4 lbs. 7 oz.)
Installation	Threaded holes on the rear surface or Panel mounting

[NOTE]
1MPa = 10.2 kgf/cm^2 = 145.04 PSI
1MPa = 7504.36 mmHg = 295.4 inHg

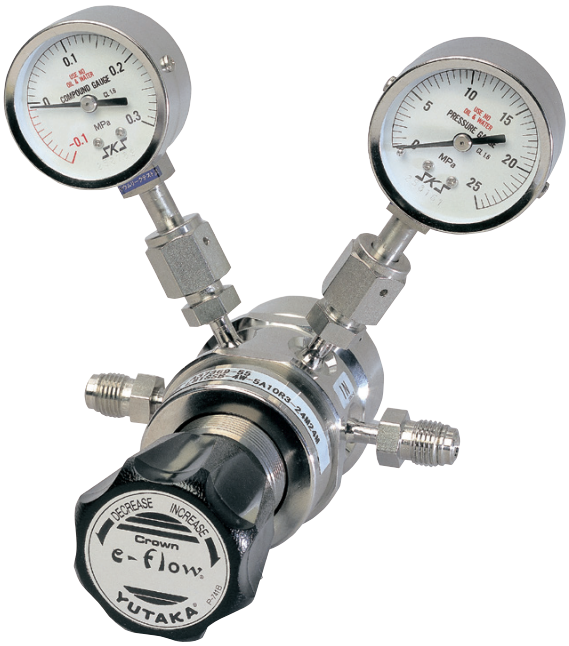

Cross sectional drawing

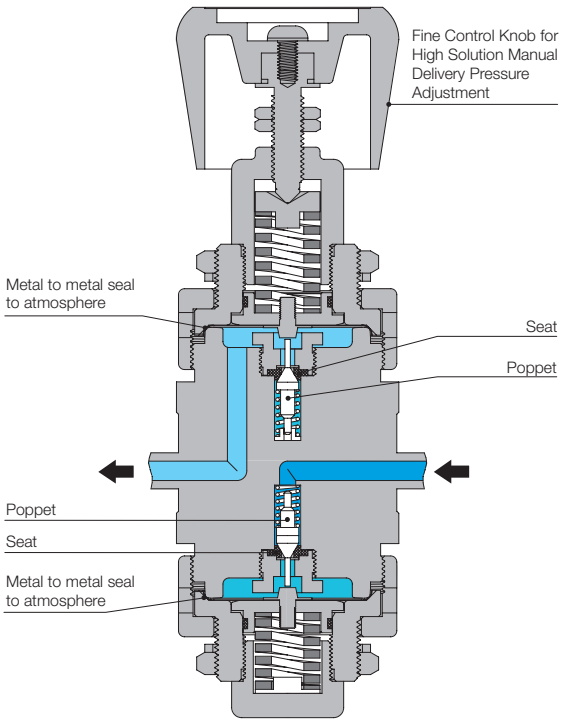

[NOTE]
・Avoid turning the control knob excessively.
・No filter in this unit.

Tied Diaphragm (Optional)

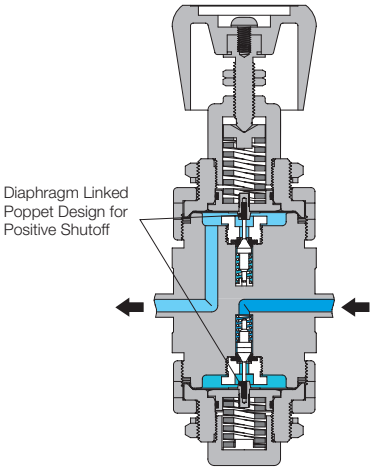

[NOTE]
Operating the Tied Diaphragm Type: In order to minimize premature wear of regulator's internal parts. Be sure not to close regulator while under pressure.

Flow characteristics

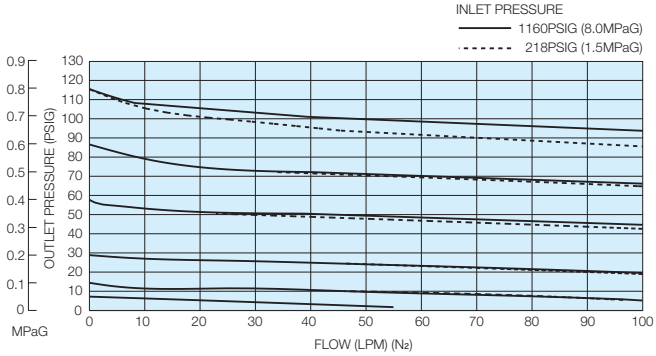

[NOTE]
・These tests were performed at ambient conditions.

Outline drawing

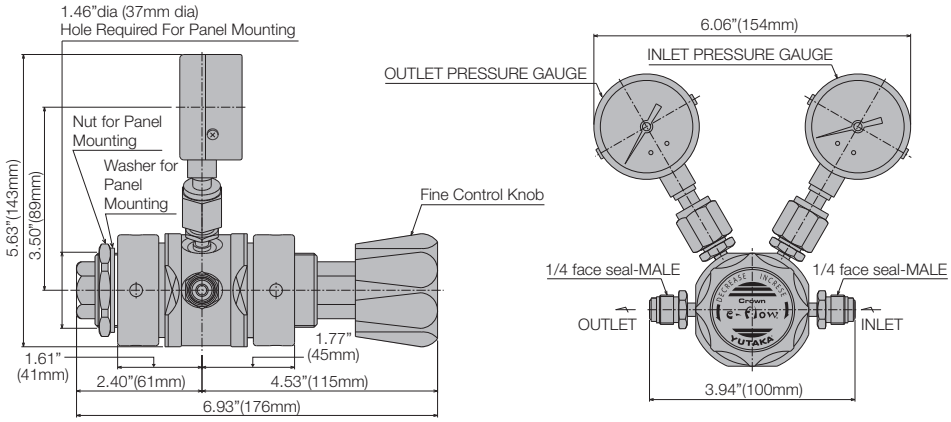

[NOTE]
- Dimensions are in inches and (mm) for reference only.
- Face to face length of the male and female are the same.
- Subject to change without notice.

Materials of construction

MODEL & TYPE	L81SS	L81SH	L81SS-N20	L81SS-CO	L81SS-NH3
Wetted Parts					
Body	SUS316L				
Poppet & Seat Retainer	SUS316L	Hastelloy® C-22	SUS316L		
Diaphragm	Hastelloy® C-22			SUS316L	Hastelloy® C-22
Seat	PCTFE		Vespel®	PCTFE	Special Fluoroplastics
Spring	SUS316	Hastelloy® C-22	SUS316		
Gasket to seal for gauge	Ni			SUS316	Ni
Non-wetted Parts					
Bonnet	SUS316				
Control Knob	ABS Resin				
O-ring	NBR				

Wetted surface finishes

Standard Ra (GRADE "B")	32μin. (0.80μm) or less
Optional Ra (GRADE "A")	7μin. (0.18μm) or less

Standard connections

1/4" face to face length of the male and female are the same. 3.94in. (100mm)
1/4" Tube stubs and other connections available as options.

[NOTE]
- Any combination of Face Seal male and/or female fittings are available for inlet and outlet.
- Size and configuration of pressure gauge port is 1/4" Face Seal male.

Ordering information

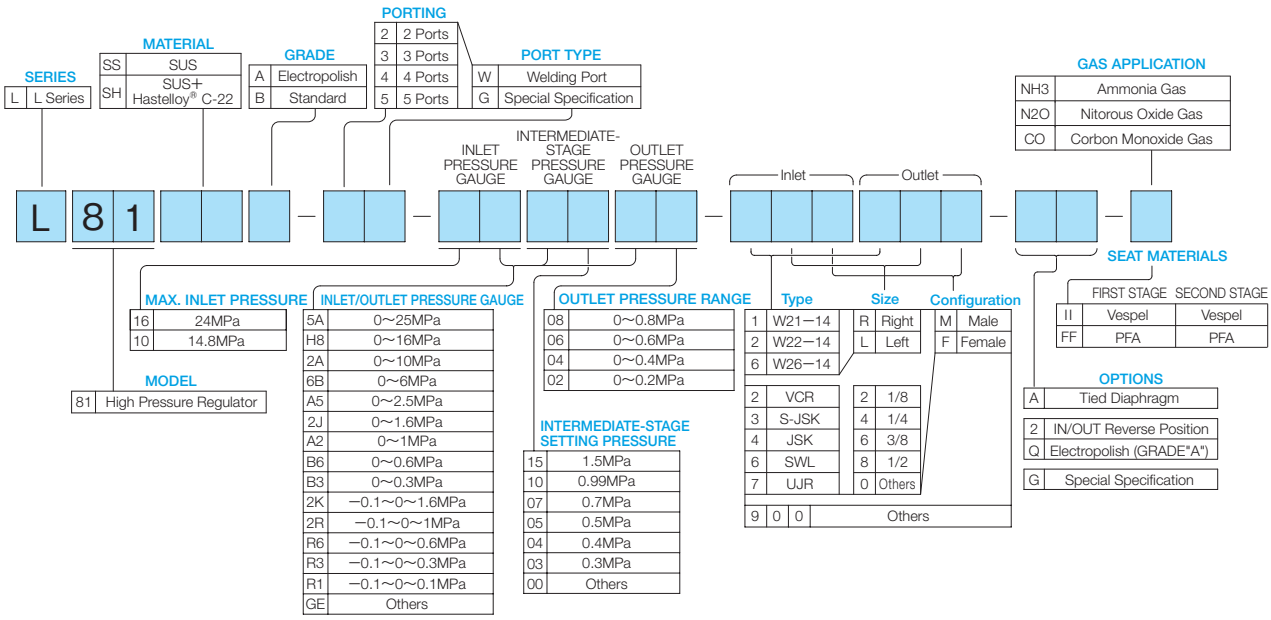

L88 Series

RoHS Directive Products

High Pressure Regulator (Recommended for B_2H_6, NF_3 Service)

Inlet Pressure	Max.24 MPaG (Max.3,480 PSIG)
Outlet Pressure	Max.0.99 MPaG (Max.144 PSIG) (Pressure Range: 0~0.2 MPa, 0~0.4 MPa, 0~0.6 MPa, 0~0.99 MPa)
Supply Pressure Effect	0.00075 MPaG (0.109 PSIG) per 0.1 MPaG (14.5 PSIG)
Proof Pressure	31.5 MPa (4,567 PSIG)
CV	0.10
Temperature	–10℃ to +40℃
Outboard Leakage	1×10^{-11} Pa・m^3/sec・He (1×10^{-10} atm・cc/sec・He)
Internal Volume	12.58 cc (0.77 in^3) w/o fittings
Approximate weight	2.4 kg (5 lbs. 5 oz.)
Installation	Threaded holes on the rear surface or Panel mounting

[NOTE]
1MPa = 10.2 kgf/cm^2 = 145.04 PSI
1MPa = 7504.36 mmHg = 295.4 inHg

Cross sectional drawing

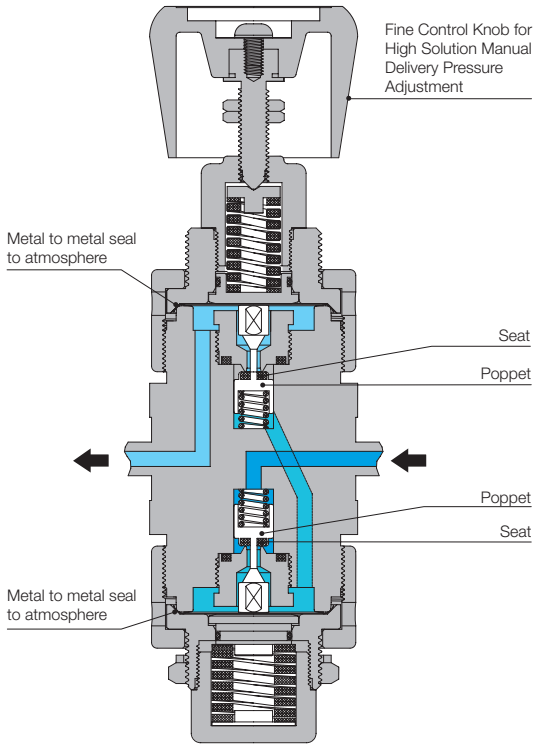

[NOTE]
・Avoid turning the control knob excessively.
・No filter in this unit.

Flow characteristics

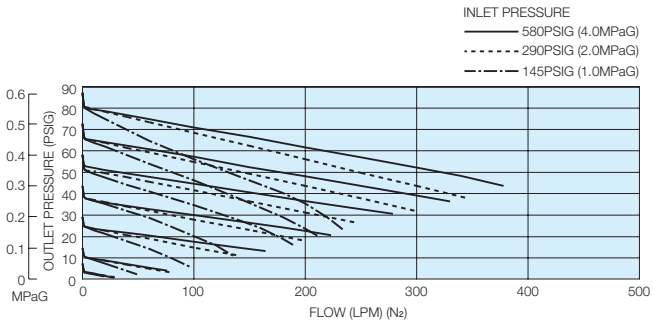

[NOTE]
・These tests were performed at ambient conditions.

Outline drawing

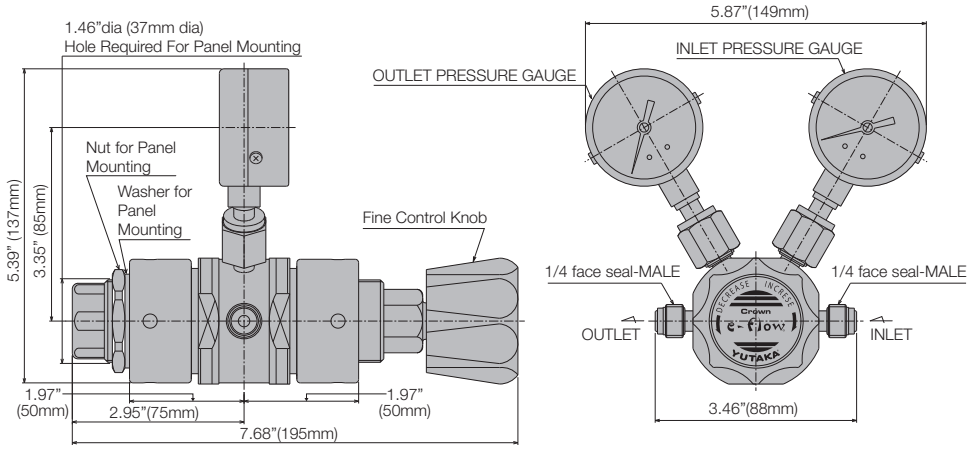

[NOTE]
- Dimensions are in inches and (mm) for reference only.
- Subject to change without notice.

Materials of construction

MODEL & TYPE	L88SS	L88SH
Wetted Parts		
Body	SUS316L	
Poppet & Seat Retainer	SUS316L	Hastelloy® C-22
Diaphragm	Hastelloy® C-22	
Seat	PTFE	
Spring	SUS316	
Gasket to seal for gauge	Ni	
Non-wetted Parts		
Bonnet	SUS316	
Control Knob	ABS Resin	
O-ring	NBR	

Wetted surface finishes

Standard Ra (GRADE "B")	32μin. (0.80μm) or less
Optional Ra (GRADE "A")	7μin. (0.18μm) or less

Standard connections

1/4" face to face length of the male and female are the same. (Male) 3.46in. (88mm)
1/4" face to face length of the male and female are the same. (Female) 4.13in. (105mm)

[NOTE]
- Any combination of Face Seal male and/or female fittings are available for inlet and outlet.
- Size and configuration of pressure gauge port is 1/4" Face Seal male.

Ordering information

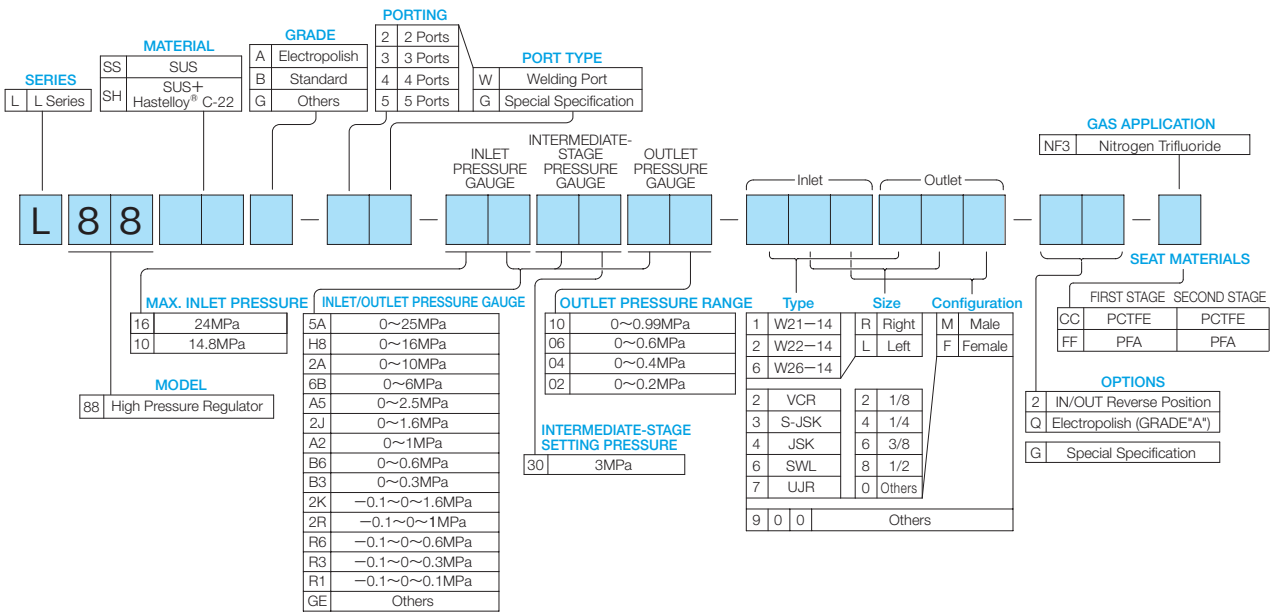

L96 Series

Absolute Pressure Regulator

Inlet Pressure	Max.1.0 MPaG (145 PSIG)
Outlet Pressure	-0.1 MPaG to 0.2 MPaG (-30 in HgG to 29.0 PSIG)
Proof Pressure	22.2 MPa (3,219 PSI)
CV	0.07
Temperature	–10˚C to +40˚C
Outboard Leakage	1×10^{-11} Pa・m^3/sec・He (1×10^{-10} atm・cc/sec・He)
Internal Volume	5.739 cc (0.35 in^3) w/o fittings
Approximate weight	1.6 kg (3 lbs. 8 oz.)
Installation	Threaded holes on the rear surface

[NOTE]
1MPa = 10.2 kgf/cm^2 = 145.04 PSI
1MPa = 7504.36 mmHg = 295.4 inHg

Cross sectional drawing

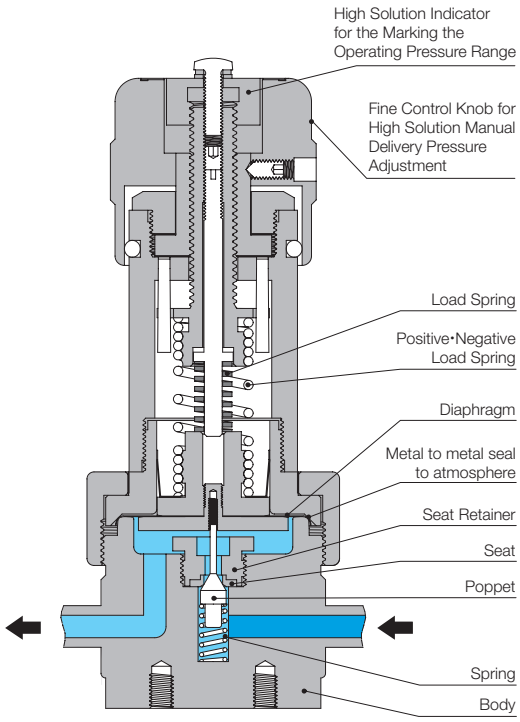

[NOTE]
・Avoid turning the control knob excessively.
・No filter in this unit.

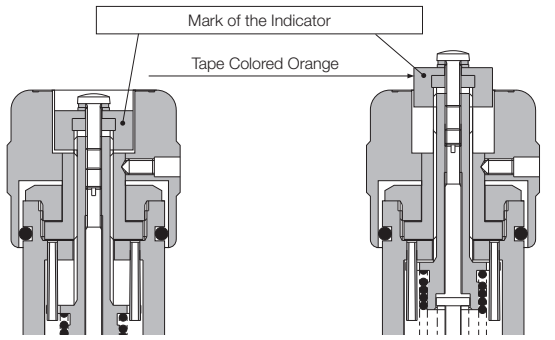

Flow characteristics

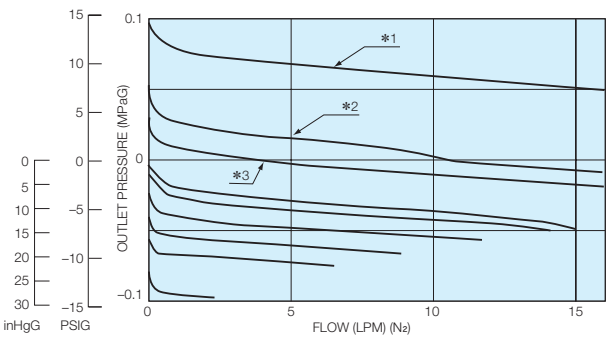

[NOTE]
・*1 Inlet Pressure=0.2MPaG (29.0 PSIG)
*2 Inlet Pressure=0.1MPaG (14.5 PSIG)
*3 Inlet Pressure=0.1MPaG (14.5 PSIG)
・Flow curves below 0 MPaG (0 PSIG) in the outlet pressure are under vacuumizing the outlet side.
・These tests were performed at ambient conditions.

Outline drawing

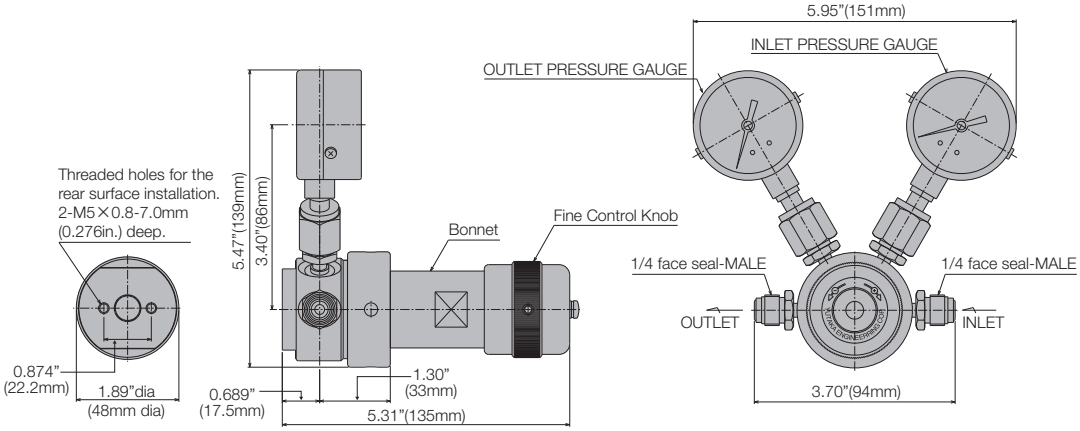

[NOTE]
- Dimensions are in inches and (mm) for reference only.
- Subject to change without notice.

Materials of construction

MODEL & TYPE	L96SS	L96SH	L96SS-CO
Wetted Parts			
Body	SUS316L		
Poppet & Seat Retainer	SUS316L	Hastelloy® C-22	SUS316L
Diaphragm	Hastelloy® C-22		SUS316L
Seat	PCTFE		
Spring	SUS316L		
Gasket to seal for gauge	Ni		SUS316L
Non-wetted Parts			
Bonnet (B)	Chromium Plated Brass		
Cap	SUS304		
Stem	Nickel Plated Brass		
Control Knob	Chromium Plated Brass		

Wetted surface finishes

Standard Ra (GRADE "B")	32μin. (0.80μm) or less
Optional Ra (GRADE "A")	7μin. (0.18μm) or less

Standard connections

1/4" face to face length of the male and female are the same. 3.70in. (94mm)
1/4" Tube stubs and other connections available as options.

[NOTE]
- Any combination of Face Seal male and/or female fittings are available for inlet and outlet.
- Size and configuration of pressure gauge port is 1/4" Face Seal male.

Ordering information

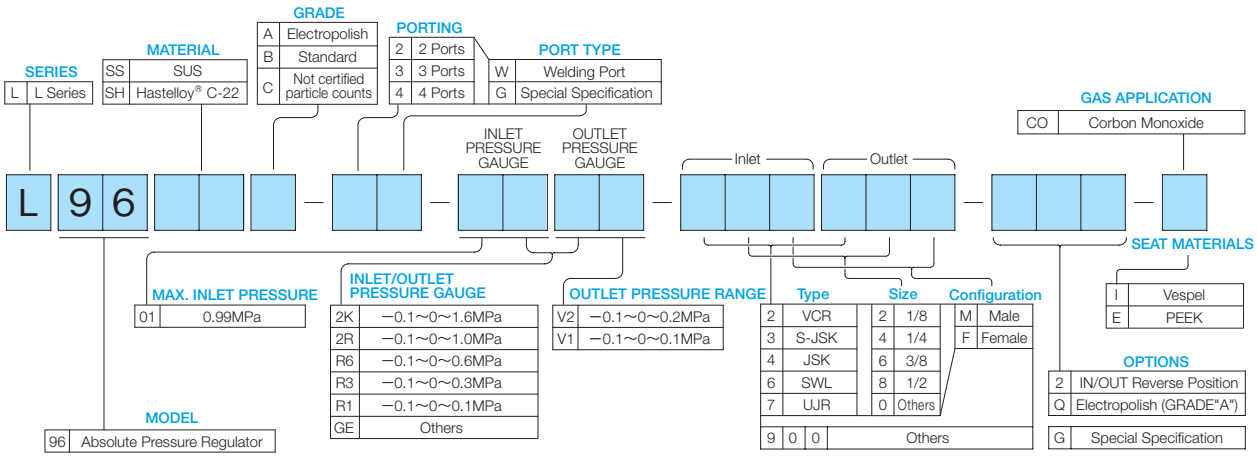

LH1 Series

RoHS Directive Products

High Flow Rate Applications

Inlet Pressure	Max.6 MPaG (Max.870 PSIG)
Outlet Pressure	Max.0.8 MPaG (Max.116 PSIG) (Pressure Range: 0~0.2 MPa, 0~0.4 MPa, 0~0.6 MPa, 0~0.8 MPa)
Supply Pressure Effect	0.0019 MPaG (0.28 PSIG) per 0.1 MPaG (14.5 PSIG)
Proof Pressure	9.0 MPa (1,305 PSI)
CV	0.7
Temperature	–10℃ to +40℃
Outboard Leakage	1×10^{-11} Pa・m^3/sec・He (1×10^{-10} atm・cc/sec・He)
Internal Volume	32.3 cc (1.95 in^3) w/o fittings
Approximate weight	4.7 kg (10 lbs. 6 oz.)
Installation	Threaded holes on the rear surface or Panel mounting

[NOTE]
1MPa = 10.2 kgf/cm^2 = 145.04 PSI
1MPa = 7504.36 mmHg = 295.4 inHg

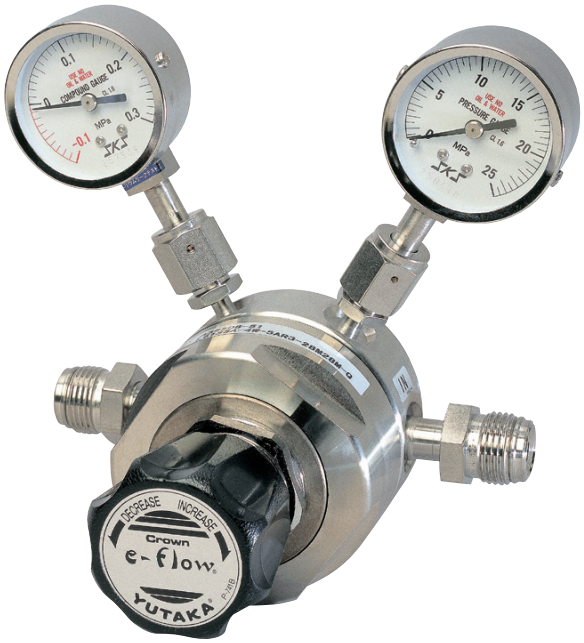

Cross sectional drawing

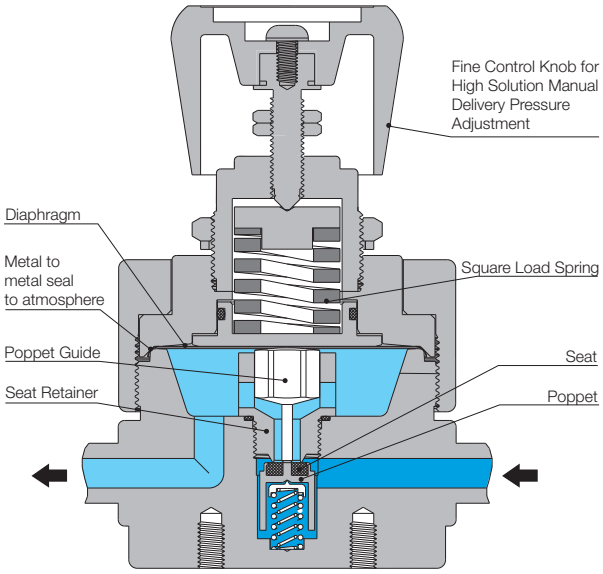

[NOTE]
・Avoid turning the control knob excessively.
・Series LH2 are recommended for Chroline (CL_2) service and Nitrous Oxide (N_2O) service.
・No filter in this unit.

Flow characteristics

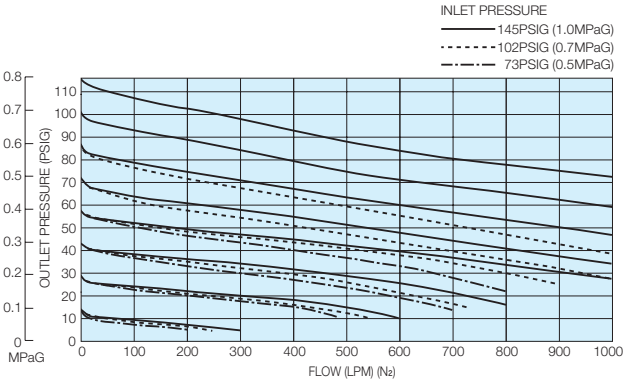

[NOTE]
・These tests were performed at ambient conditions.

Outline drawing

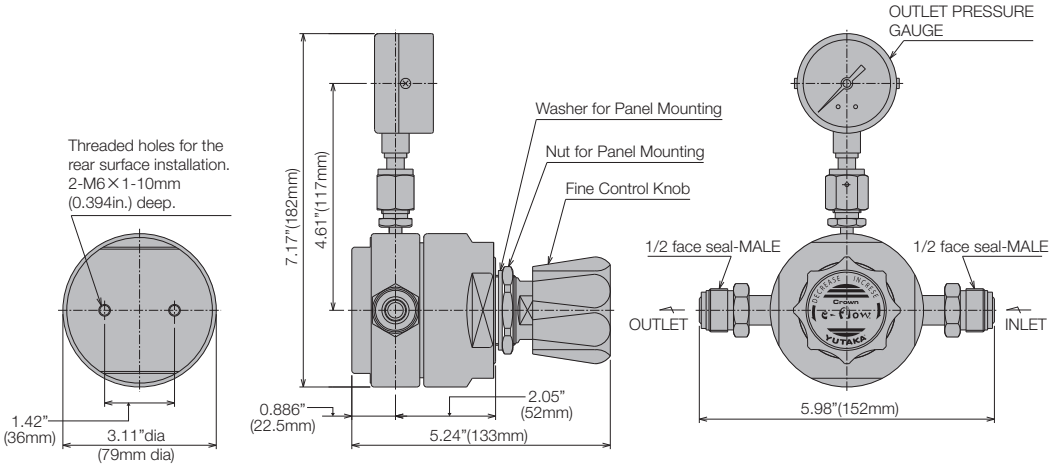

[NOTE]
- Dimensions are in inches and (mm) for reference only.
- Subject to change without notice.

Materials of construction

MODEL & TYPE	LH1SS	LH1SH	LH1SS-CO
Wetted Parts			
Body	SUS316L		
Poppet	SUS316	Hastelloy® C-22	SUS316
Seat Retainer	SUS316L	Hastelloy® C-22	SUS316L
Diaphragm	Hastelloy® C-22		SUS316L
Seat	PCTFE		
Spring	SUS316		
Gasket to seal for gauge	Ni		SUS316
Non-wetted Parts			
Bonnet	SUS304		
Control Knob	ABS Resin		
O-ring	NBR		

Wetted surface finishes

Standard Ra (GRADE "B")	32μin. (0.80μm) or less
Optional Ra (GRADE "A")	7μin. (0.18μm) or less

Standard connections

3/8", 1/2" face to face length of the male and female are the same. 5.98in. (152mm)

[NOTE]
- Any combination of Face Seal male and/or female fittings are available for inlet and outlet.
- Size and configuration of pressure gauge port is 1/4" Face Seal male.

Ordering information

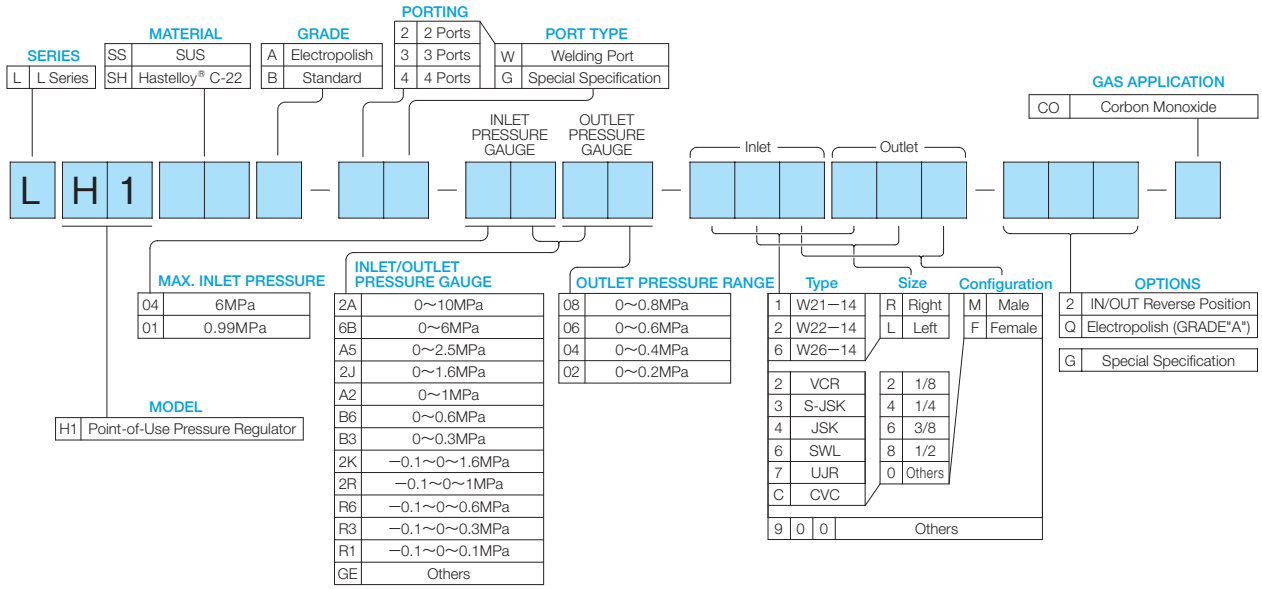

LH2 Series

RoHS Directive Products

High Flow Rate Applications (Needle Type)

Inlet Pressure	Max.6 MPaG (Max.870 PSIG)
Outlet Pressure	Max.0.8 MPaG (Max.116 PSIG) (Pressure Range: 0～0.2 MPa, 0～0.4 MPa, 0～0.6 MPa, 0～0.8 MPa)
Supply Pressure Effect	0.0019 MPaG (0.28 PSIG) per 0.1 MPaG (14.5 PSIG)
Proof Pressure	9.0 MPa (1,305 PSI)
CV	0.60
Temperature	–10℃ to +40℃
Outboard Leakage	1×10^{-11} Pa・m^3/sec・He (1×10^{-10} atm・cc/sec・He)
Internal Volume	32.3 cc (1.95 in^3) w/o fittings
Approximate weight	4.7 kg (10 lbs. 6 oz.)
Installation	Threaded holes on the rear surface or Panel mounting

[NOTE]
1MPa = 10.2 kgf/cm^2 = 145.04 PSI
1MPa = 7504.36 mmHg = 295.4 inHg

Cross sectional drawing

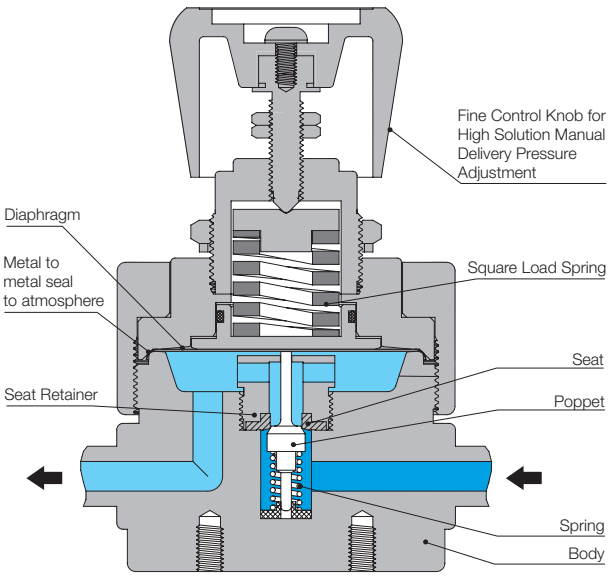

[NOTE]
・Avoid turning the control knob excessively.
・No filter in this unit.

Flow characteristics

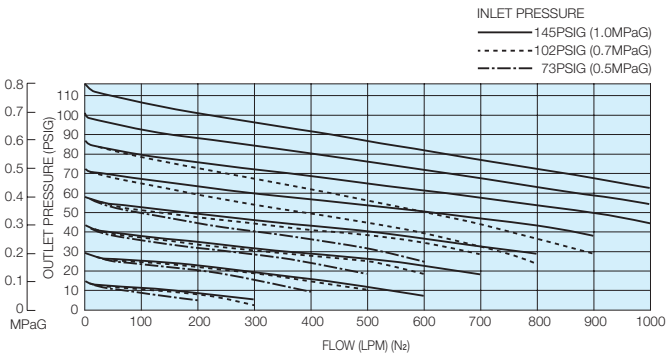

[NOTE]
・These tests were performed at ambient conditions.

Outline drawing

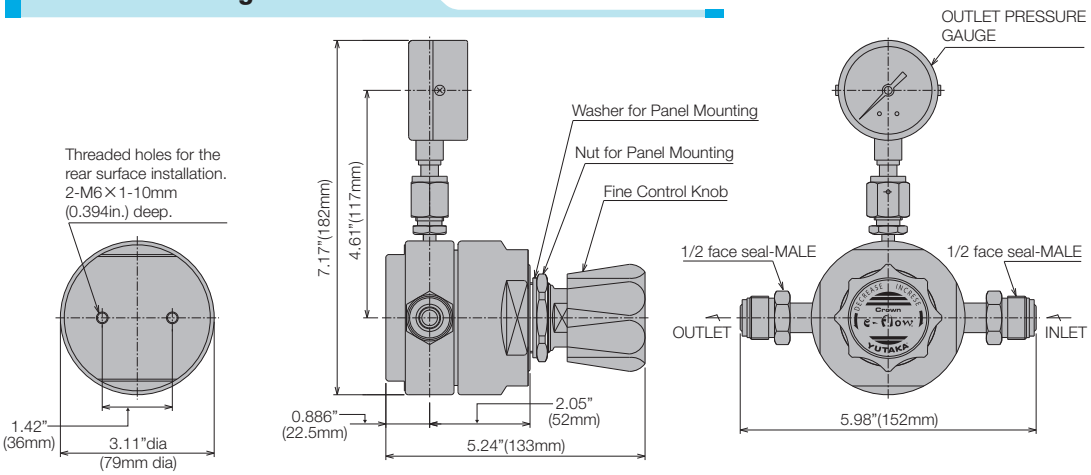

[NOTE]
- Dimensions are in inches and (mm) for reference only.
- Face to face length of the male and female are the same.
- Subject to change without notice.

Materials of construction

MODEL & TYPE	LH2SS	LH2SH	LH2SS-C0	LH2SH-CL2	LH2SS-N20	LH2SS-NH3
Wetted Parts						
Body	SUS316L					
Poppet	SUS316	Hastelloy® C-22	SUS316	Hastelloy® C-22	SUS316	
Seat Retainer	SUS316L	Hastelloy® C-22	SUS316L	Hastelloy® C-22	SUS316L	
Diaphragm	Hastelloy® C-22		SUS316L	Hastelloy® C-22		
Seat	PCTFE			Fluoroplastics	Vespel®	Special Fluoroplastics
Spring	SUS316					
Gasket to seal for gauge	Ni		SUS316	Ni		
Non-wetted Parts						
Bonnet	SUS304					
Control Knob	ABS Resin					
O-ring	NBR					

Wetted surface finishes

Standard Ra (GRADE "B")	32μin. (0.80μm) or less
Optional Ra (GRADE "A")	7μin. (0.18μm) or less

Standard connections

3/8", 1/2" face to face length of the male and female are the same. 5.98in. (152mm)

[NOTE]
- Any combination of Face Seal male and/or female fittings are available for inlet and outlet.
- Size and configuration of pressure gauge port is 1/4" Face Seal male.

Ordering information

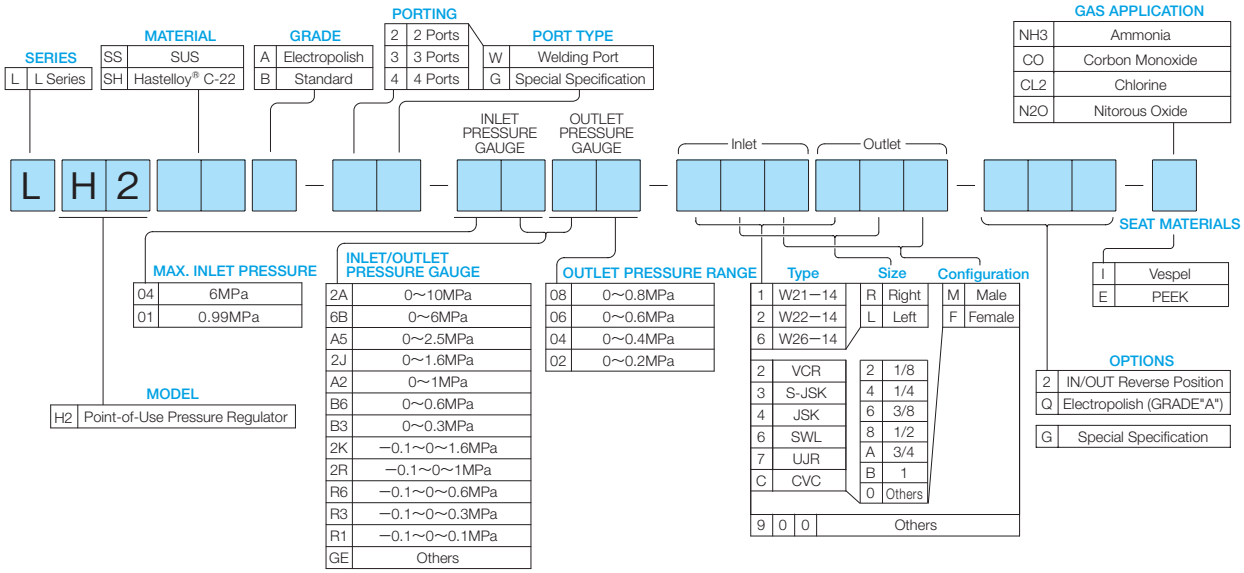

LM1 Series

RoHS Directive Products

High Flow Rate Applications

Inlet Pressure	Max.2 MPaG (Max.290 PSIG)
Outlet Pressure	Max.0.8 MPaG (Max.116 PSIG) (Pressure Range: 0~0.2 MPa, 0~0.4 MPa, 0~0.6 MPa, 0~0.8 MPa)
Proof Pressure	3.0 MPa (435 PSI)
CV	1.81
Temperature	–10°C to +40°C
Outboard Leakage	1×10^{-9} Pa・m^3/sec・He (1×10^{-8} atm・cc/sec・He)
Approximate weight	5.5 kg (12 lbs. 2 oz.)
Installation	Threaded holes on the rear surface

[NOTE]
1MPa = 10.2 kgf/cm^2 = 145.04 PSI
1MPa = 7504.36 mmHg = 295.4 inHg

Cross sectional drawing

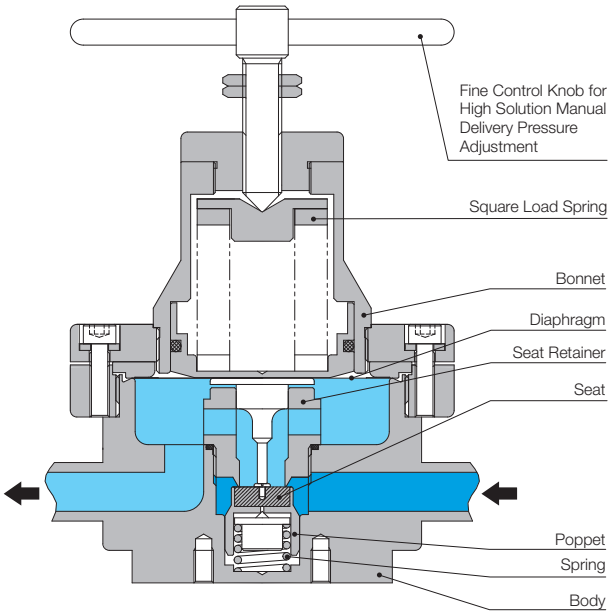

[NOTE]
・Avoid turning the control knob excessively.
・No filter in this unit.

Flow characteristics

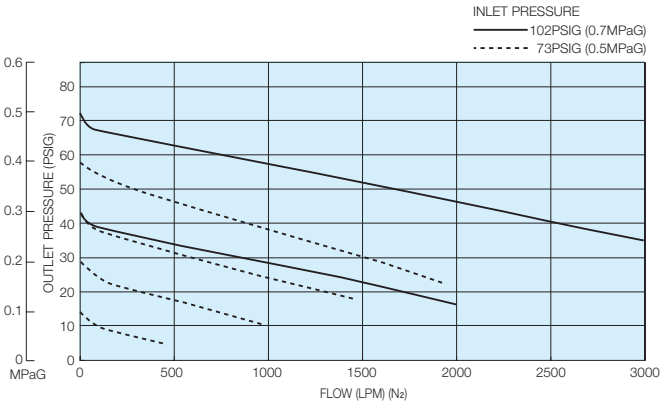

[NOTE]
・These tests were performed at ambient conditions.

Outline drawing

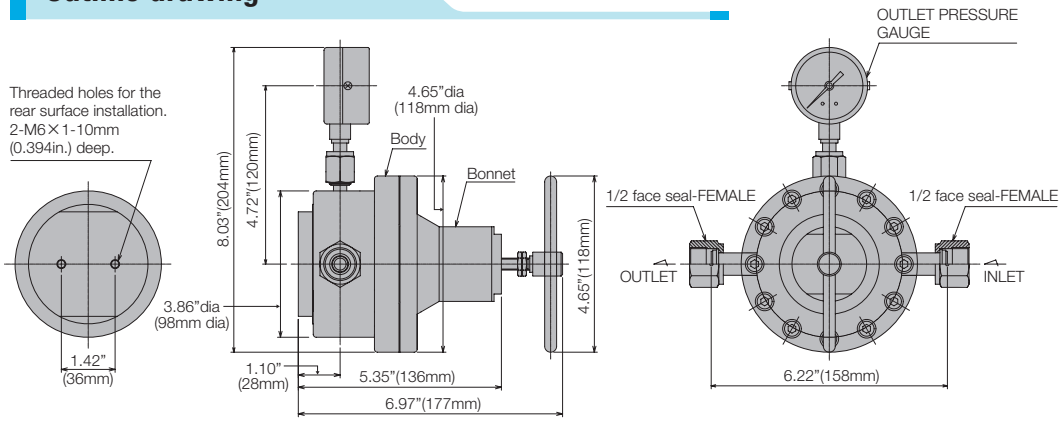

[NOTE]
- Dimensions are in inches and (mm) for reference only.
- Face to face length of the male and female are the same.
- Subject to change without notice.

Materials of construction

MODEL & TYPE	LM1SS
Wetted Parts	
Body	SUS316L
Poppet	SUS316
Diaphragm	Hastelloy® C-22
Seat	PCTFE
Gasket to seal for gauge	Ni
Gasket	PTFE
Non-wetted Parts	
Bonnet	Nickel Plated Brass
Control Knob	SUS304
O-ring	NBR

Wetted surface finishes

Standard Ra (GRADE "B")	32μin. (0.80μm) or less
Standard Ra (GRADE "C")	roughness on machined surface

Standard connections

1/2" face to face length of the male and female are the same. 6.22in. (158mm)
3/4" face to face length of the male and female are the same. 7.22in. (183.5mm)
JIS 10k-25A flange face to face length 8.78in. (223mm)

[NOTE]
- Any combination of Face Seal male and/or female fittings are available for inlet and outlet.
- Size and configuration of pressure gauge port is 1/4" Face Seal male.

Ordering information

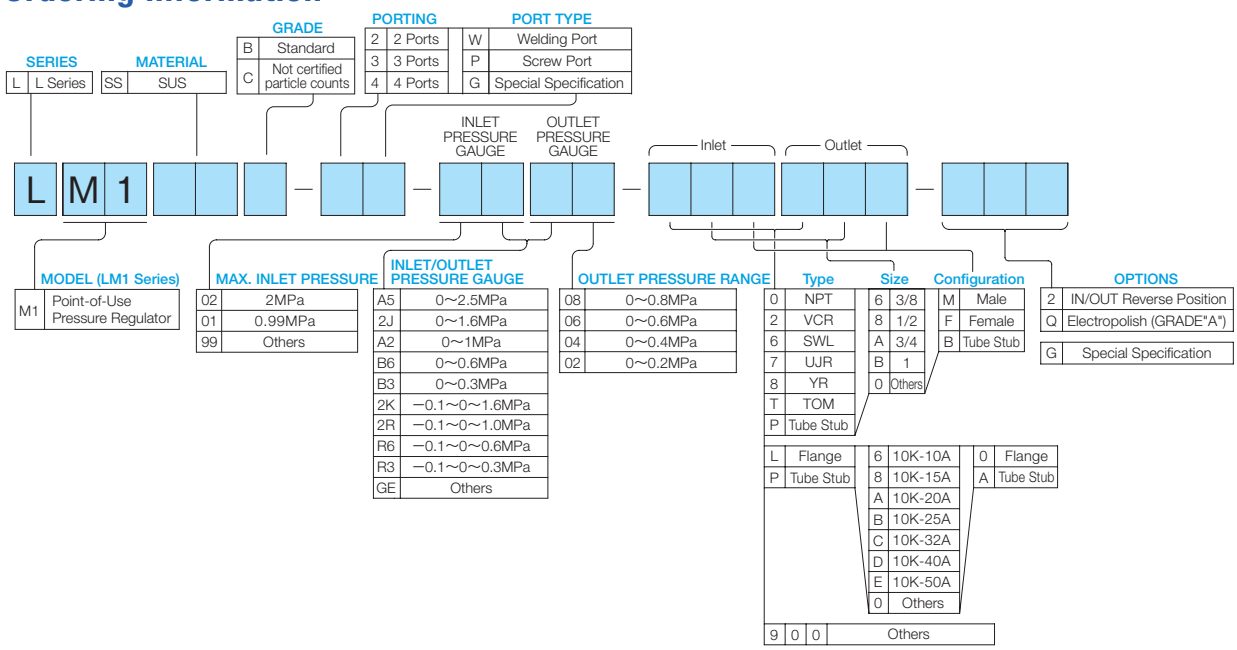

LM2 Series

High Flow Rate Applications (Needle Type)

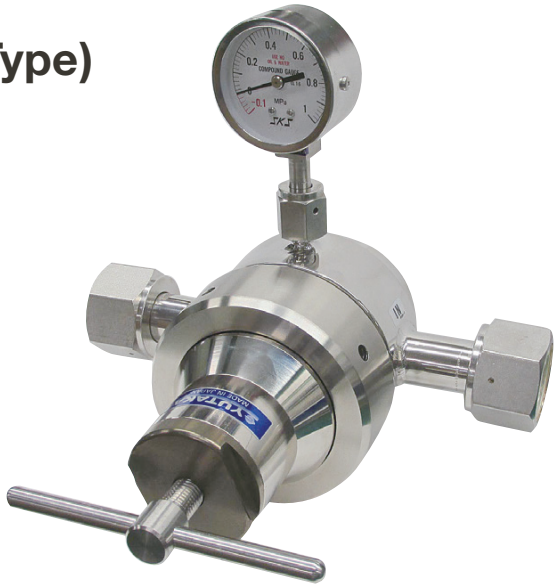

Inlet Pressure	Max.2 MPaG (Max.290 PSIG)
Outlet Pressure	Max.0.8 MPaG (Max.116 PSIG) (Pressure Range: 0～0.2 MPa, 0～0.4 MPa, 0～0.6 MPa, 0～0.8 MPa)
Supply Pressure Effect	0.016 MPaG (2.32 PSIG) per 0.1 MPaG (14.5 PSIG)
Proof Pressure	3.0 MPa (435 PSI), 1.5 MPa (Outlet Side)
CV	1.69
Temperature	–10℃ to +40℃
Outboard Leakage	Welding (W): 1×10^{-11} Pa・m^3/sec・He (1×10^{-10} atm・cc/sec・He) Screw (P): 1×10^{-9} Pa・m^3/sec・He (1×10^{-8} atm・cc/sec・He)
Approximate weight	5.0 kg (11 lbs. 0 oz.)
Installation	Threaded holes on the rear surface

[NOTE]
1MPa = 10.2 kgf/cm^2 = 145.04 PSI
1MPa = 7504.36 mmHg = 295.4 inHg

Cross sectional drawing

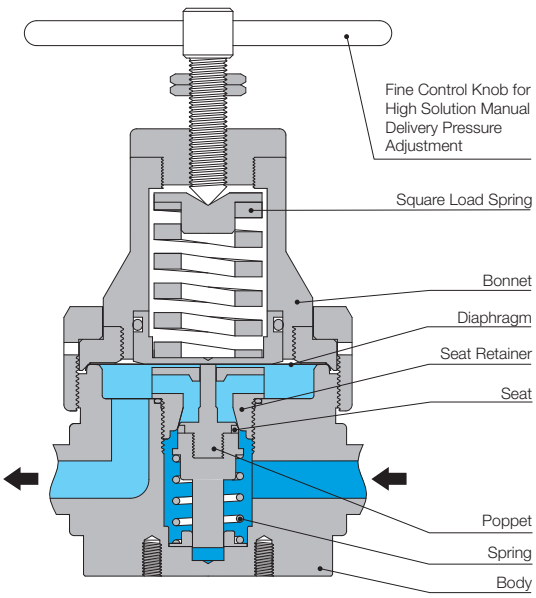

[NOTE]
・Avoid turning the control knob excessively.
・No filter in this unit.

Flow characteristics

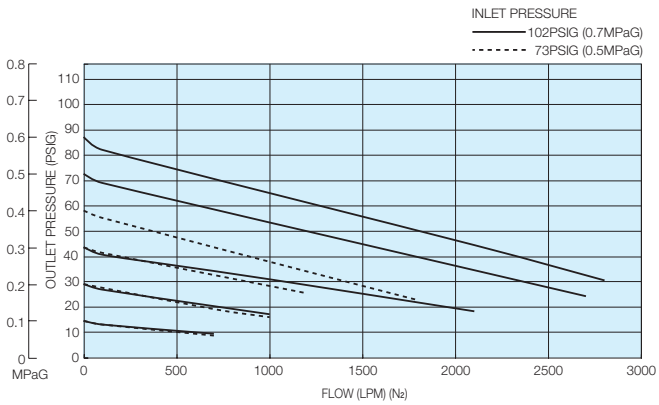

[NOTE]
・These tests were performed at ambient conditions.

Outline drawing

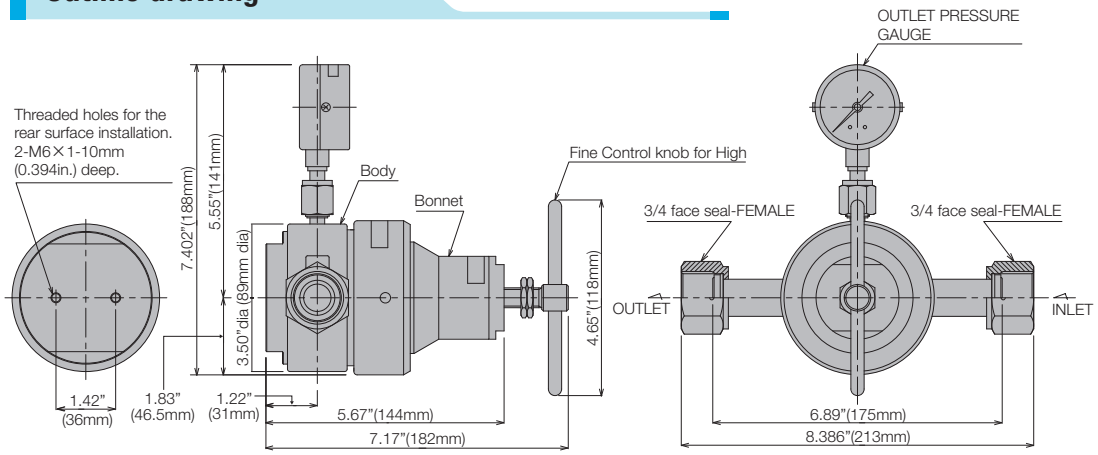

[NOTE]
- Dimensions are in inches and (mm) for reference only.
- Face to face length of the male and female are the same.
- Subject to change without notice.

Materials of construction

MODEL & TYPE	LM2SSB	LM2SSC
Wetted Parts		
Body	SUS316L	
Poppet & Seat Retainer	SUS316L	
Diaphragm	Hastelloy® C-22	
Seat	PTFE	
Spring	SUS316	
Gasket to seal for gauge	Ni	
Gasket	PTFE	
Non-wetted Parts		
Bonnet	Nickel Plated Brass	
Control Knob	SUS304	
O-ring	NBR	

Wetted surface finishes

Standard Ra (GRADE "B")	32μin. (0.80μm) or less
Standard Ra (GRADE "C")	roughness on machined surface

Standard connections

1/2" NPT body length 3.50in. (89mm)

3/4", 1/2" face to face length of the male and female are the same. 6.89in. (175mm)

[NOTE]
- Any combination of Face Seal male and/or female fittings are available for inlet and outlet.
- Size and configuration of pressure gauge port is 1/4" Face Seal male.

Ordering information

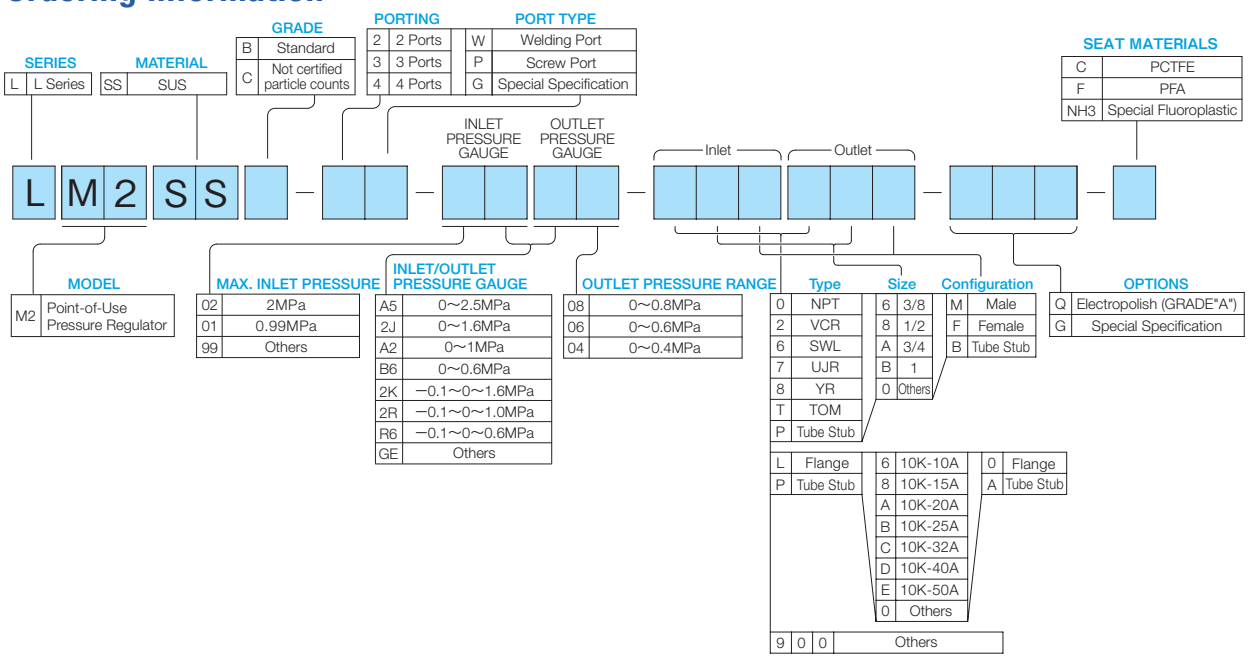

LL1 Series

High Flow Rate Applications

Inlet Pressure	Max.2 MPaG (Max.290 PSIG)
Outlet Pressure	Max.0.8 MPaG (Max.116 PSIG)
Supply Pressure Effect	0.00158 MPaG (0.229 PSIG) per 0.1 MPaG (14.5 PSIG)
Proof Pressure	3.0 MPa (435 PSI)
CV	1.69
Temperature	–10℃ to +40℃
Outboard Leakage	1×10^{-9} Pa・m^3/sec・He (1×10^{-8} atm・cc/sec・He) (GRADE"B")
Approximate weight	8.4 kg (18 lbs. 8 oz.)
Installation	Threaded holes on the rear surface

[NOTE]
1MPa = 10.2 kgf/cm^2 = 145.04 PSI
1MPa = 7504.36 mmHg = 295.4 inHg

Cross sectional drawing

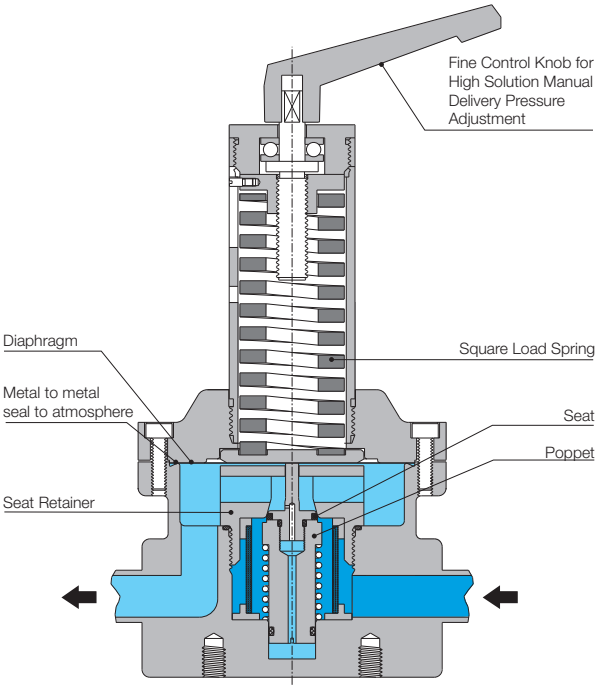

[NOTE]
・Avoid turning the control knob excessively.

Flow characteristics

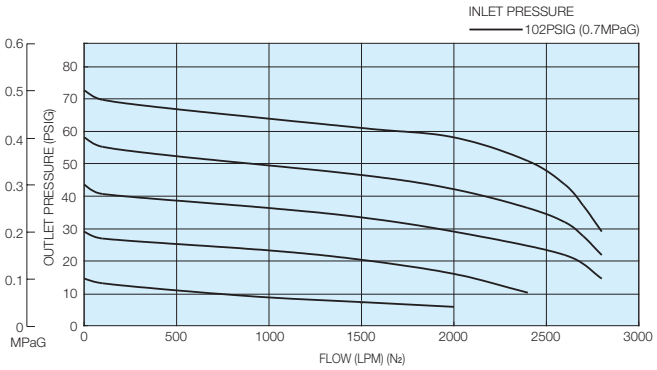

[NOTE]
・These tests were performed at ambient conditions.

Outline drawing

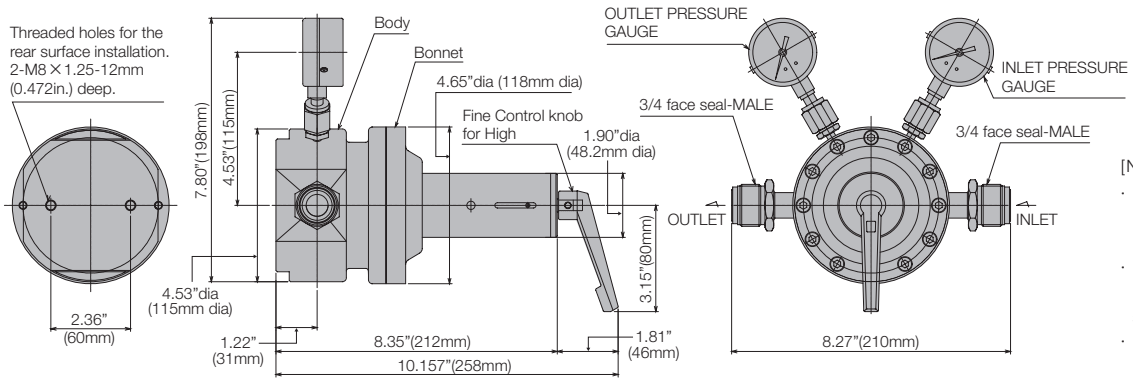

[NOTE]
- Dimensions are in inches and (mm) for reference only.
- Face to face length of the male and female are the same.
- Subject to change without notice.

Materials of construction

MODEL & TYPE	LL1SS
Wetted Parts	
Body	SUS316L
Poppet & Seat Retainer	SUS316L
Diaphragm	Hastelloy® C-22
Seat	PTFE
Spring	SUS316
Gasket to seal for gauge	Ni
O-ring	VITON®
Non-wetted Parts	
Bonnet	SUS304
Control Knob	Aluminum

Wetted surface finishes

Standard Ra (GRADE "B")	32μin. (0.80μm) or less
Standard Ra (GRADE "C")	roughness on machined surface

Standard connections

3/4" face to face length of the male and female are the same. 8.27in. (210mm)
JIS 10k-25A flange face to face length 9.45in. (240mm)

[NOTE]
- Any combination of Face Seal male and/or female fittings are available for inlet and outlet.
- Size and configuration of pressure gauge port is 1/4" Face Seal male.

Ordering information

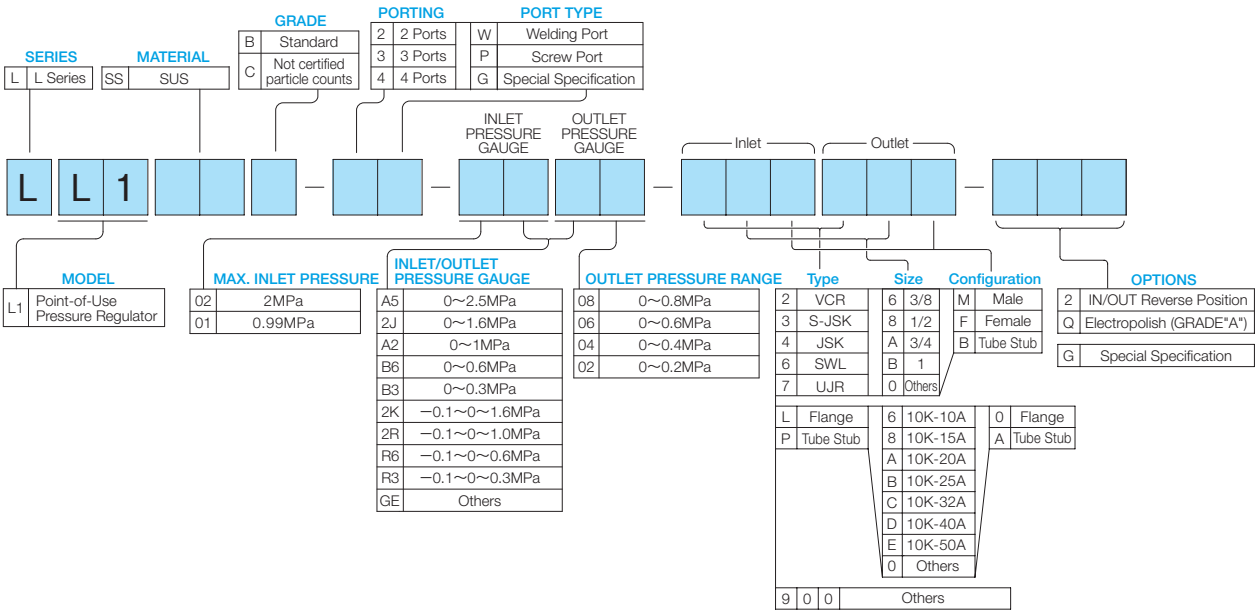

LL2 Series

RoHS Directive Products

High Flow Rate Applications

Inlet Pressure	Max.2 MPaG (Max.290 PSIG)
Outlet Pressure	Max.0.8 MPaG (Max.116 PSIG)
Supply Pressure Effect	0.00162 MPaG (0.235 PSIG) per 0.1 MPaG (14.5 PSIG)
Proof Pressure	3.0 MPa (435 PSI)
CV	2.42
Temperature	–10℃ to +40℃
Outboard Leakage	1×10^{-9} Pa・m^3/sec・He (1×10^{-8} atm・cc/sec・He) (GRADE"B")
Approximate weight	12.2 kg (26 lbs. 14 oz.)
Installation	Threaded holes on the rear surface

[NOTE]
1MPa = 10.2 kgf/cm^2 = 145.04 PSI
1MPa = 7504.36 mmHg = 295.4 inHg

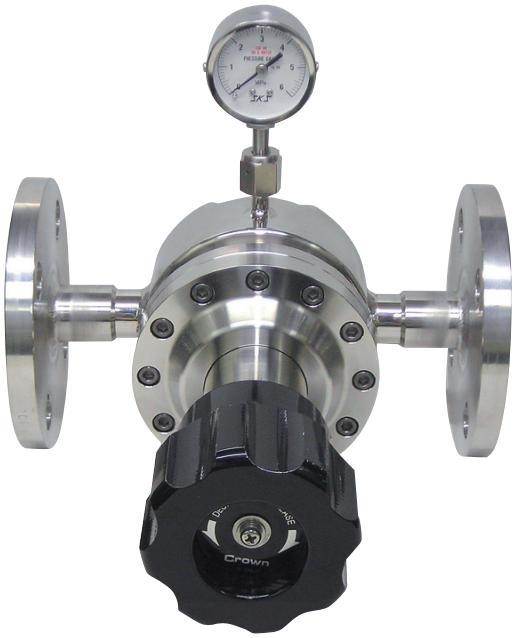

Cross sectional drawing

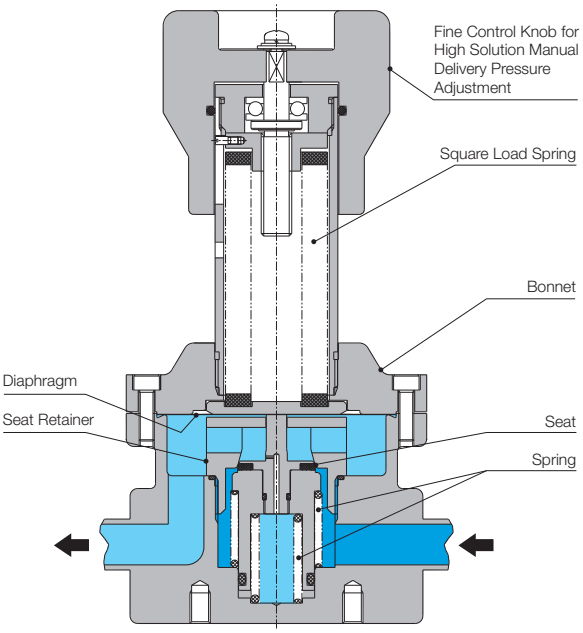

[NOTE]
・Avoid turning the control knob excessively.

Flow characteristics

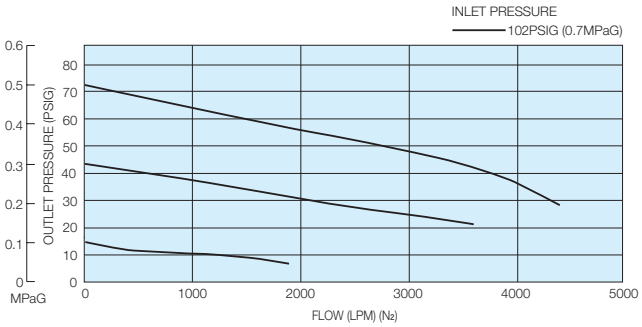

[NOTE]
・These tests were performed at ambient conditions.

Outline drawing

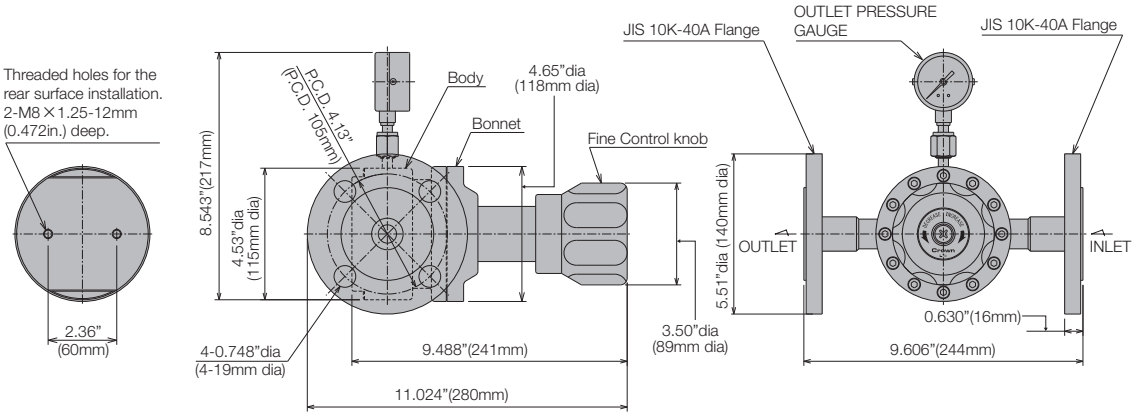

[NOTE]
- Dimensions are in inches and (mm) for reference only.
- Face to face length of the male and female are the same.
- Subject to change without notice.

Materials of construction

MODEL & TYPE	LL2SS
Wetted Parts	
Body	SUS316L
Poppet & Seat Retainer	SUS316L
Diaphragm	Hastelloy® C-22
Seat	PTFE
Spring	SUS316
Gasket to seal for gauge	Ni
O-ring	PTFE FKM
Non-wetted Parts	
Bonnet	SUS304
Control Knob	A6063S

Wetted surface finishes

Standard Ra (GRADE "B")	32μin. (0.80μm) or less
Standard Ra (GRADE "C")	roughness on machined surface

Standard connections

JIS 10k-40A flange face to face length
..... **9.606in. (244mm)**

[NOTE]
- Any combination of Face Seal male and/or female fittings are available for inlet and outlet.
- Size and configuration of pressure gauge port is 1/4" Face Seal male.

Ordering information

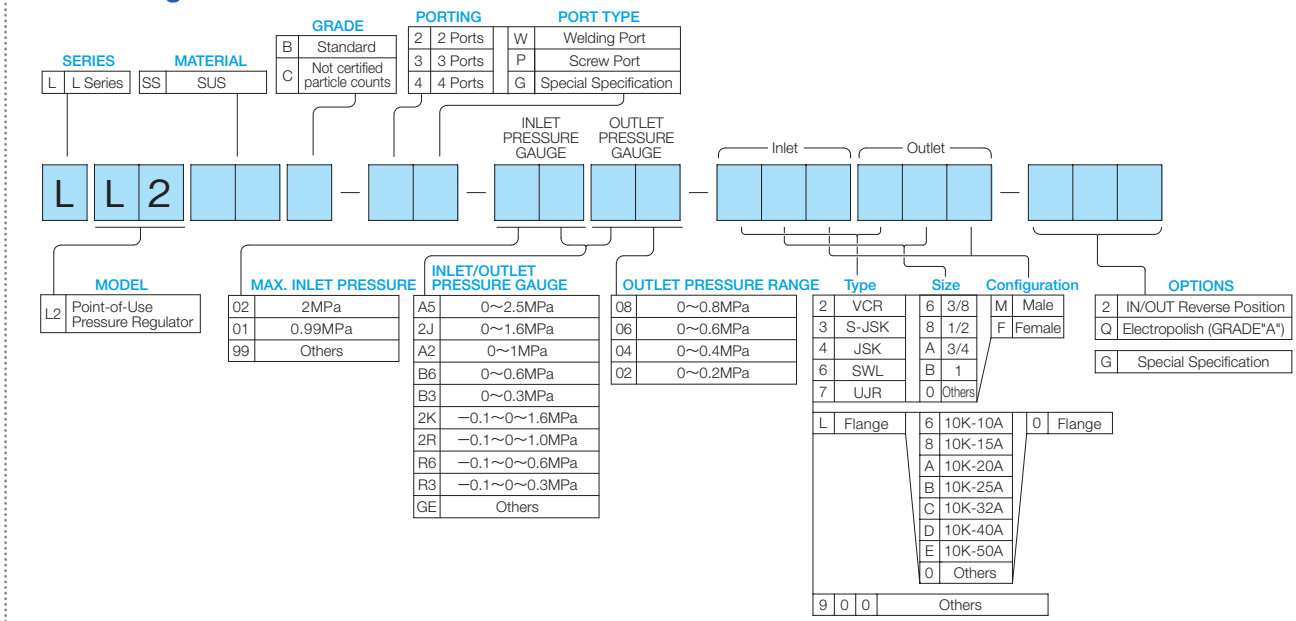

L18 Series

RoHS Directive Products

Miniature Pressure Regulator Standard Flow Rate Applications

Inlet Pressure	Max.0.99 MPaG (Max.144 PSIG)
Outlet Pressure	Max.0.7 MPaG (Max.102 PSIG) (Pressure Range: 0～0.2 MPa, 0～0.4MPa, 0～0.6MPa, 0～0.7MPa)
Supply Pressure Effect	0.0007 MPaG (0.102 PSIG) per 0.05 MPaG (0.102 PSIG)
Proof Pressure	1.5 MPa (218 PSI)
Temperature	–10°C to +40°C
Outboard Leakage	1×10^{-11} Pa・m^3/sec・He (1×10^{-10} atm・cc/sec・He)
Approximate weight	IGS: 420 g (0 lbs. 15 oz.), Welding: 360 g (0 lbs. 13 oz.)
Installation	Threaded holes on the rear surface

[NOTE]
1MPa = 10.2 kgf/cm^2 = 145.04 PSI
1MPa = 7504.36 mmHg = 295.4 inHg

Cross sectional drawing

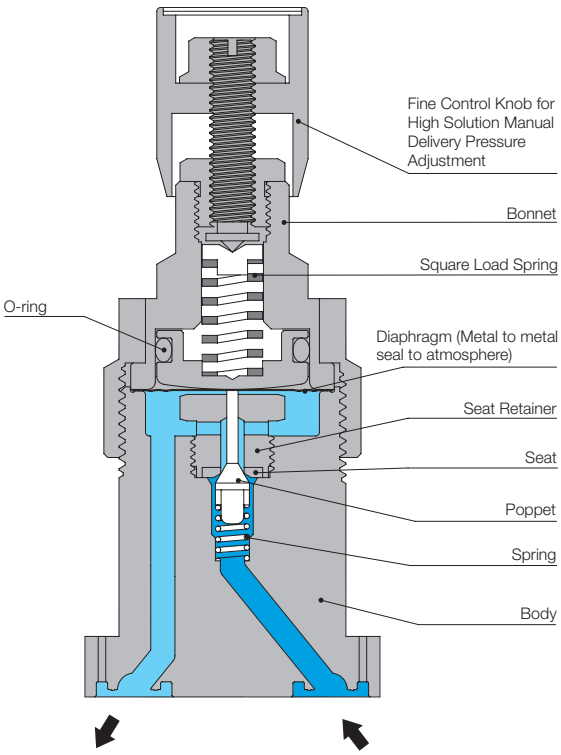

[NOTE]
・Avoid turning the control knob excessively.
・No filter in this unit.

Flow characteristics

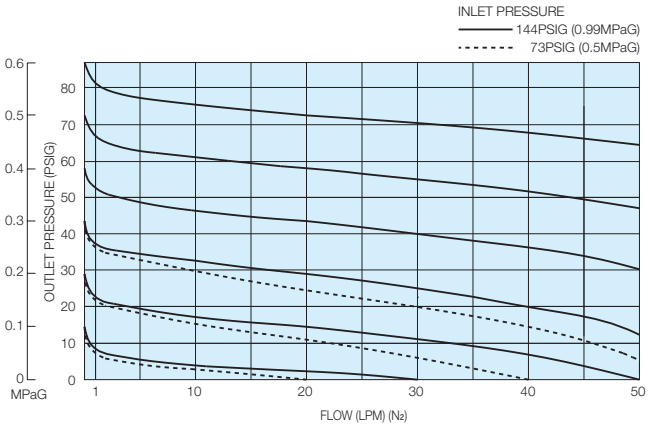

[NOTE]
・These tests were performed at ambient conditions.

Outline drawing

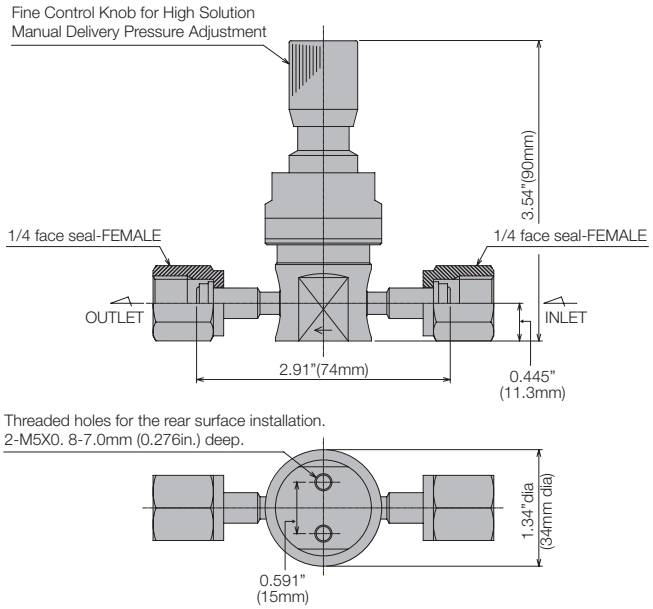

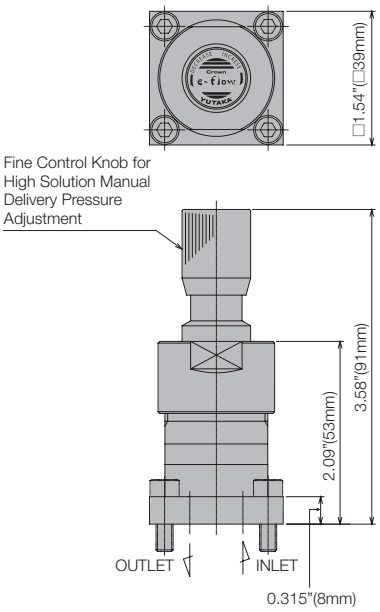

[NOTE]
- Dimensions are in inches and (mm) for reference only.
- Face to face length of the male and female are the same.
- Subject to change without notice.

Materials of construction

MODEL & TYPE	L18SS	L18SH	L18SV	L18VH	L18SH-CL2
Wetted Parts					
Body	SUS316L		SUS316L V.I.M		SUS316L
Poppet	SUS316L	Hastelloy® C-22	SUS316L	Hastelloy® C-22	
Diaphragm	Hastelloy® C-22				
Seat	PCTFE				Fluoroplastics
Gasket to seal for gauge	Ni				
Non-wetted Parts					
Bonnet	Chromium Plated Brass				
Control Knob	Chromium Plated Brass				
O-ring	NBR				

Wetted surface finishes

Standard Ra (GRADE "S")	3.2μin. (0.08μm) or less

Standard connections

1/4" face to face length of the male and female are the same. 2.91in. (74mm)

[NOTE]
- Any combination of Face Seal male and/or female fittings are available for inlet and outlet.
- Size and configuration of pressure gauge port is 1/4" Face Seal male.

Ordering information

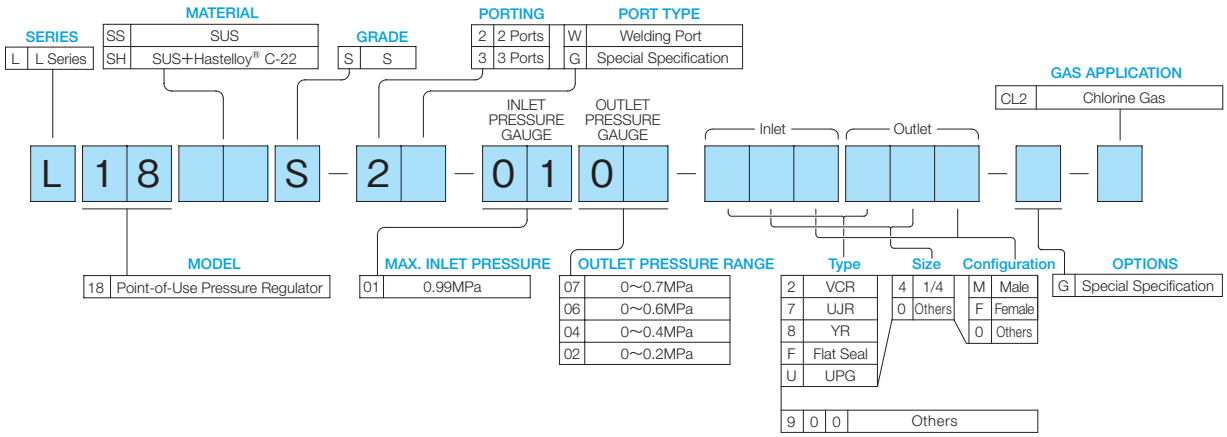

L18H Series

RoHS Directive Products

Miniature Pressure Regulator Medium Flow Rate Applications

Inlet Pressure	Max.0.99 MPaG (Max.144 PSIG)
Outlet Pressure	Max.0.7 MPaG (Max.102 PSIG) (Pressure Range: 0~0.2 MPa, 0~0.4 MPa, 0~0.6 MPa, 0~0.7 MPa)
Proof Pressure	1.5 MPa (218 PSI)
Temperature	–10°C to +40°C
Outboard Leakage	1×10^{-11} Pa・m^3/sec・He (1×10^{-10} atm・cc/sec・He)
Approximate weight	0.36 kg (0 lbs. 13 oz.)
Installation	Threaded holes on the rear surface

[NOTE]
1MPa = 10.2 kgf/cm^2 = 145.04 PSI
1MPa = 7504.36 mmHg = 295.4 inHg

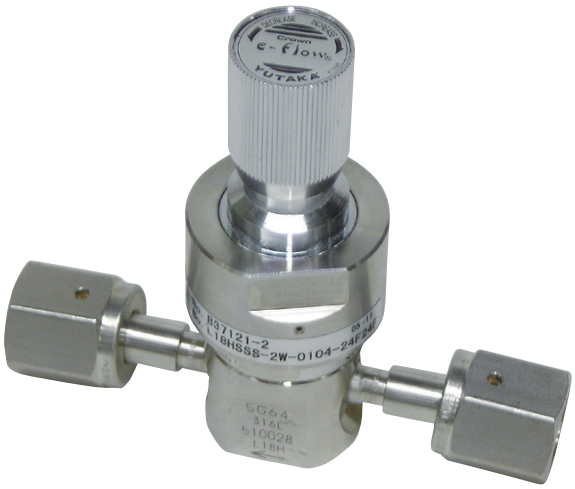

Cross sectional drawing

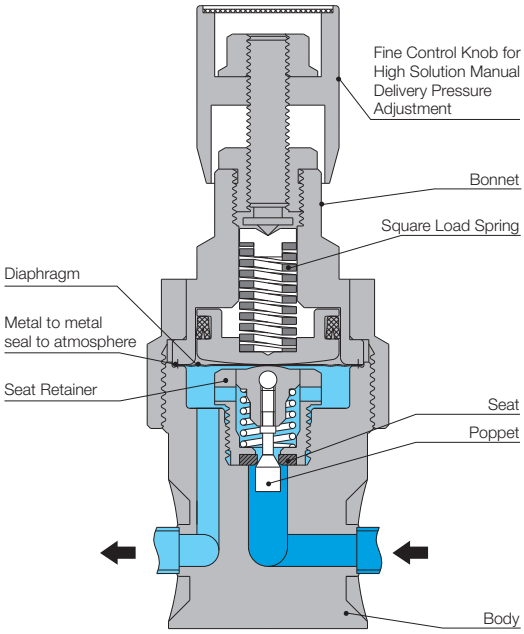

[NOTE]
・Avoid turning the control knob excessively.
・No filter in this unit.

Flow characteristics

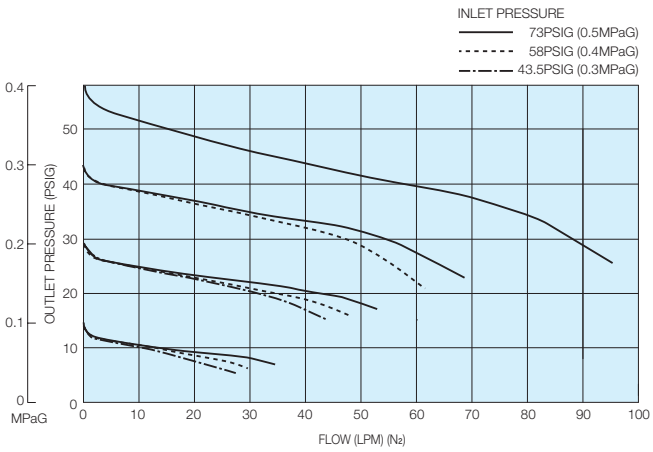

[NOTE]
・These tests were performed at ambient conditions.

Outline drawing

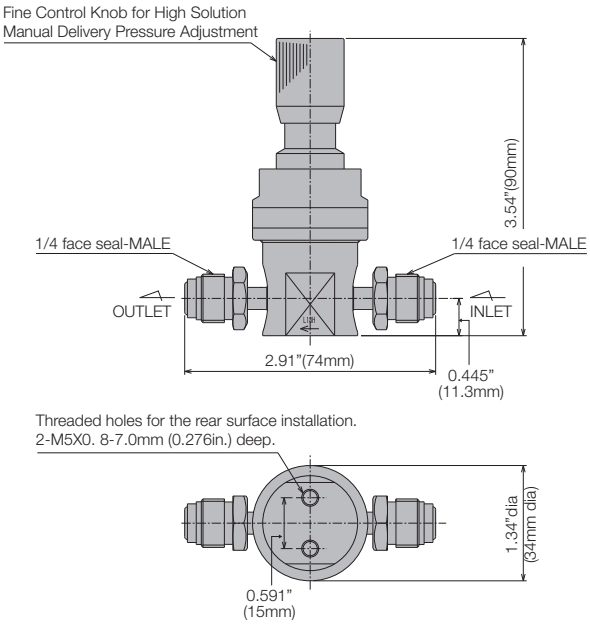

[NOTE]
- Dimensions are in inches and (mm) for reference only.
- Face to face length of the male and female are the same.
- Subject to change without notice.

Materials of construction

MODEL & TYPE	L18HSS	L18HSH	L18HSV	L18HVH	L22HSH-CL2
Wetted Parts					
Body	SUS316L		SUS316L V.I.M		SUS316L
Poppet	SUS316L	Hastelloy® C-22	SUS316L	Hastelloy® C-22	
Diaphragm	Hastelloy® C-22				
Seat	PCTFE				Fluoroplastics
Gasket to seal for gauge	Ni				
Non-wetted Parts					
Bonnet	Chromium Plated Brass				
Control Knob	Chromium Plated Brass				
O-ring	NBR				

Wetted surface finishes

Standard Ra (GRADE "S")	3.2μin. (0.08μm) or less
Standard Ra (GRADE "A")	7μin. (0.18μm) or less
Standard Ra (GRADE "B")	32μin. (0.80μm) or less

Standard connections

1/4" face to face length of the male and female are the same. 2.91in. (74mm)

[NOTE]
- Any combination of Face Seal male and/or female fittings are available for inlet and outlet.
- Size and configuration of pressure gauge port is 1/4" Face Seal male.

Ordering information

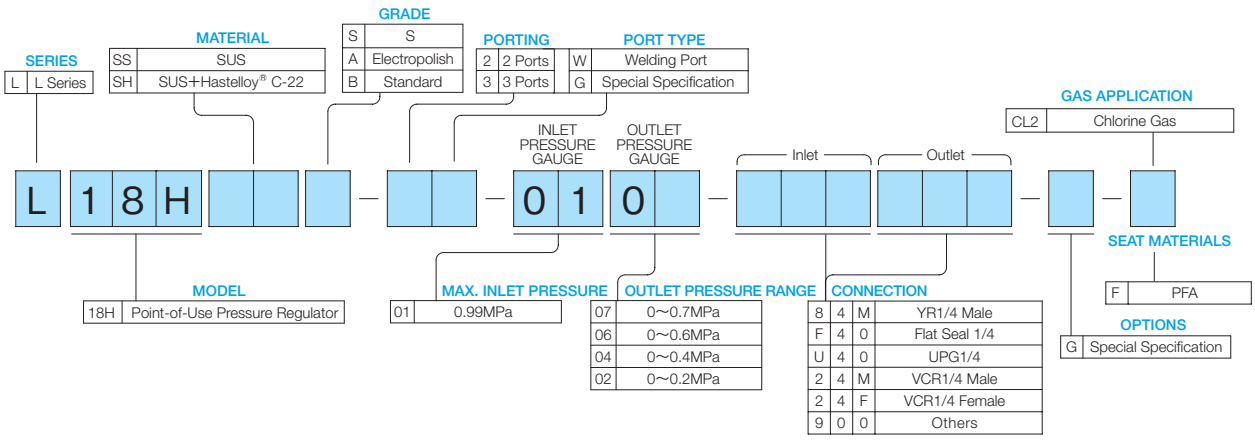

R20 Series

High Pressure Regulator

Inlet Pressure	Max.24 MPaG (Max.3,480 PSIG)
Outlet Pressure	Max.0.99 MPaG (Max.144 PSIG) (Pressure Range: 0~0.2 MPa, 0~0.4 MPa, 0~0.6 MPa, 0~0.99 MPa)
Supply Pressure Effect	0.00086 MPaG (0.12 PSIG) per 0.1 MPaG (14.5 PSIG)
Proof Pressure	31.5 MPa (4,567 PSI), 1.5 MPa (Outlet Side)
CV	0.08
Temperature	–10℃ to +40℃
Outboard Leakage	Screw (P); 1×10^{-9} Pa・m^3/sec・He (1×10^{-8} atm・cc/sec・He) Welding (W); 1×10^{-11} Pa・m^3/sec・He (1×10^{-10} atm・cc/sec・He)
Internal Volume	4.67 cc (0.28 in^3) w/o fittings
Approximate weight	1.29 kg (2 lbs.14 oz.)
Installation	Threaded holes on the rear surface or Panel mounting

[NOTE]
1MPa = 10.2 kgf/cm^2 = 145.04 PSI
1MPa = 7504.36 mmHg = 295.4 inHg

Cross sectional drawing

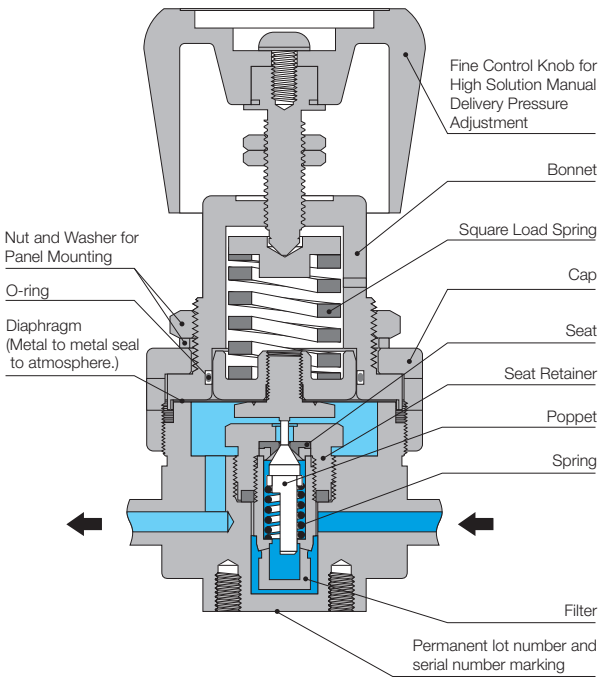

[NOTE]
- Avoid turning the control knob excessively.
- Series R25, R26 are recommended for Choline (CL_2) service and Nitrous Oxide (N_2O) service.

Tied Diaphragm (Optional)

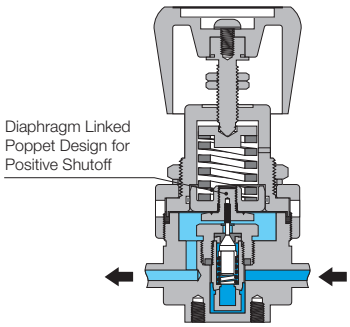

[NOTE]
Operating the Tied Diaphragm Type: In order to minimize premature wear of regulator's internal parts. Be sure not to close regulator while under pressure.

Flow characteristics

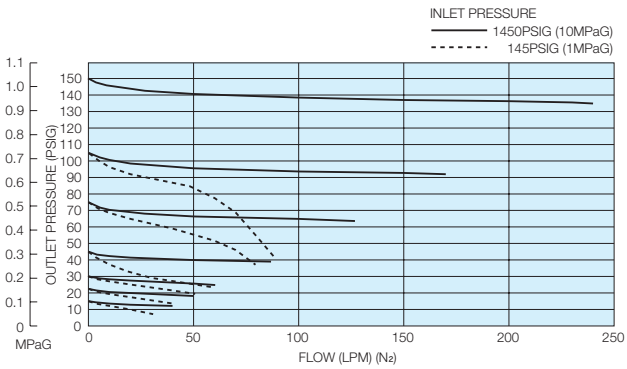

[NOTE]
- These tests were performed at ambient conditions.

Outline drawing

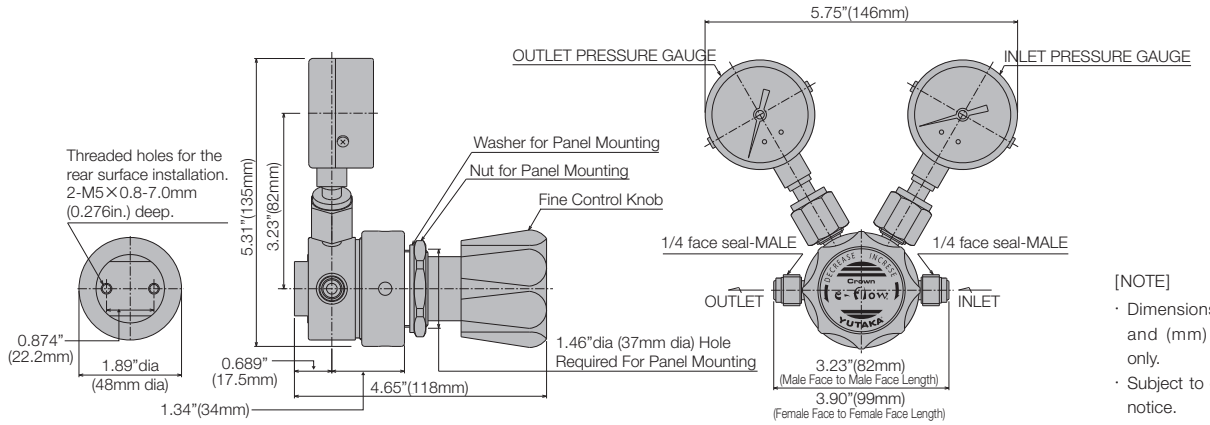

[NOTE]
- Dimensions are in inches and (mm) for reference only.
- Subject to change without notice.

Materials of construction

MODEL & TYPE	R20SS	R20SH	R20SS-CO
Wetted Parts			
Body	SUS316L		
Poppet & Seat Retainer	SUS316L	Hastelloy® C-22	SUS316L
Diaphragm	SUS316L	Hastelloy® C-22	SUS316L
Seat	PCTFE		
Spring	SUS316		
Gasket	PCTFE and PTFE		
Gasket to seal for gauge	Ni		SUS316
Non-wetted Parts			
Bonnet	Nickel Plated Brass		
Cap	Nickel Plated Brass		
Control Knob	ABS Resin		
O-ring	NBR		

Wetted surface finishes

Standard Ra (GRADE "B"&"C")	32μin. (0.80μm) or less
Optional Ra (GRADE "A")	7μin. (0.18μm) or less

Standard connections

1/4" NPT body length 1.93in. (48mm)
1/4" face to face length of the male and female are the same. (Male) 3.23in. (82mm)
1/4" face to face length of the male and female are the same. (Female) 3.90in. (99mm)
1/4" sus tube fitting length 4.37in. (111mm)

[NOTE]
- Any combination of Face Seal male and/or female fittings are available for inlet and outlet.
- Size and configuration of pressure gauge port is 1/4" Face Seal male.

Ordering information

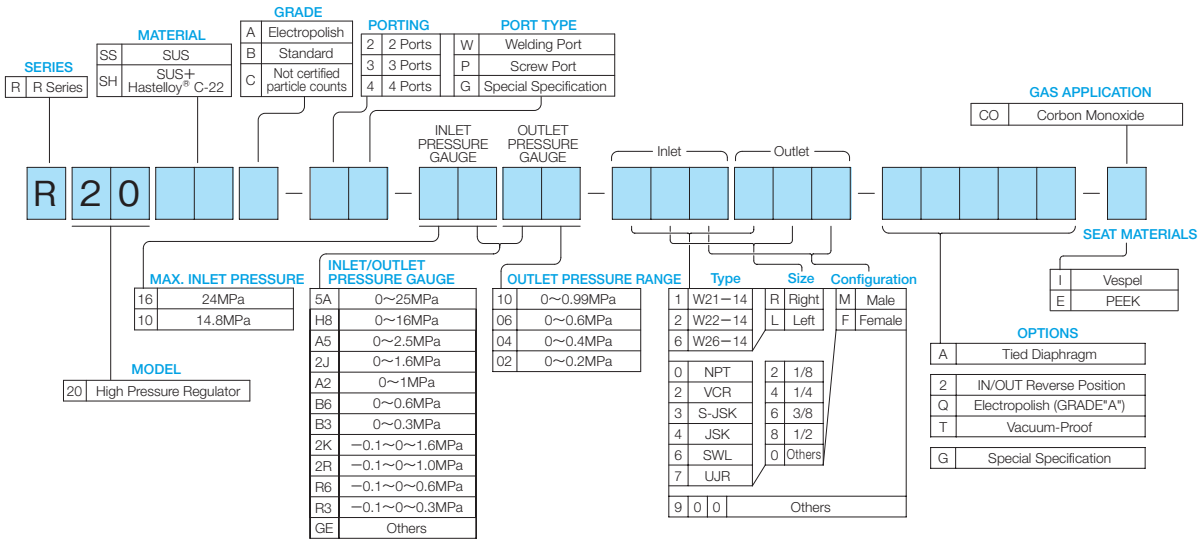

R25 Series

Point-of-Use Pressure Regulator

Inlet Pressure	Max.6 MPaG (Max.870 PSIG)
Outlet Pressure	Max.0.99 MPaG (Max.144 PSIG) (Pressure Range: 0~0.2 MPa, 0~0.4 MPa, 0~0.6 MPa, 0~0.99 MPa)
Supply Pressure Effect	0.00178 MPaG (0.27 PSIG) per 0.1 MPaG (14.5 PSIG)
Proof Pressure	31.5 MPa (4,567 PSI), 1.5 MPa (Outlet Side)
CV	0.12
Temperature	–10℃ to +40℃
Outboard Leakage	Screw (P); 1×10^{-9} Pa • m^3/sec • He (1×10^{-8} atm • cc/sec • He) Welding (W); 1×10^{-11} Pa • m^3/sec • He (1×10^{-10} atm • cc/sec • He)
Internal Volume	4.67 cc (0.28 in^3) w/o fittings
Approximate weight	0.96 kg (2 lbs. 2 oz.)
Installation	Threaded holes on the rear surface or Panel mounting

[NOTE]
1MPa = 10.2 kgf/cm^2 = 145.04 PSI
1MPa = 7504.36 mmHg = 295.4 inHg

Cross sectional drawing

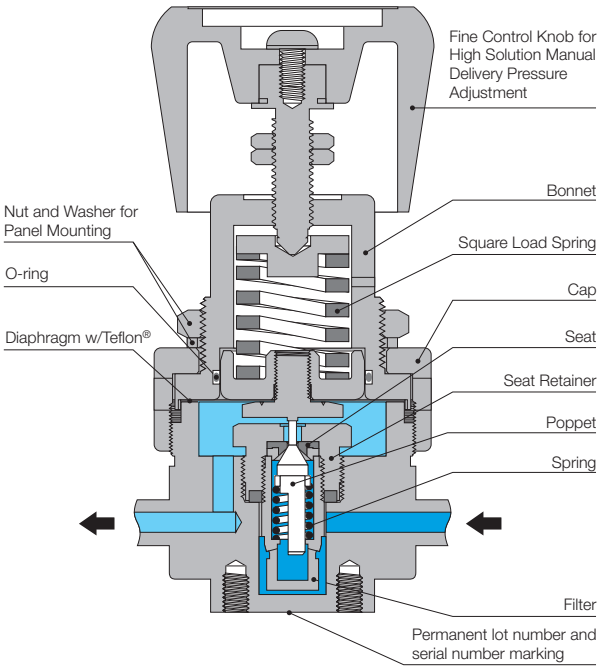

[NOTE]
- Avoid turning the control knob excessively.
- For purging at 870 PSIG (6 MPaG) and higher, operate the unit in consideration of changing the outlet pressure by the supply pressure effect.

Tied Diaphragm (Optional)

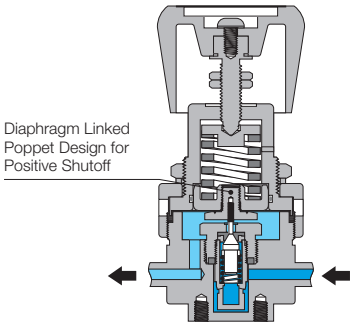

[NOTE]
Operating the Tied Diaphragm Type: In order to minimize premature wear of regulator's internal parts. Be sure not to close regulator while under pressure.

Flow characteristics

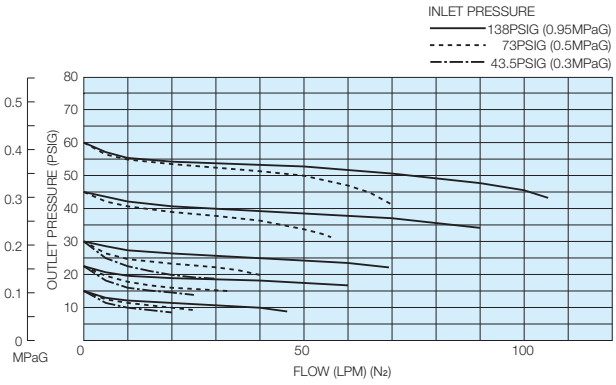

[NOTE]
- These tests were performed at ambient conditions.

Outline drawing

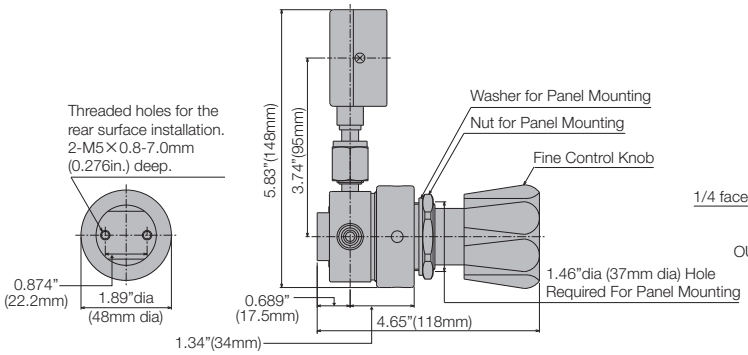

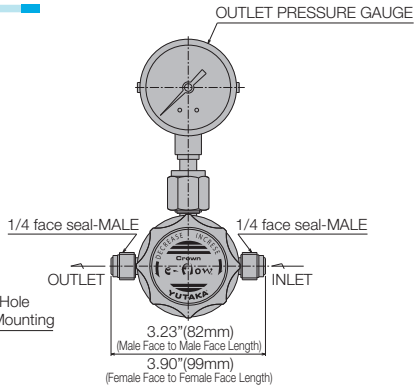

[NOTE]
- Dimensions are in inches and (mm) for reference only.
- Subject to change without notice.

Materials of construction

MODEL & TYPE	R25SS	R25SH	R25SH-CL2	R25SS-N20	R25SS-CO
Wetted Parts					
Body	SUS316L				
Poppet & Seat Retainer	SUS316L	Hastelloy® C-22		SUS316L	
Diaphragm	SUS316L	Hastelloy® C-22		SUS316L	
Seat	PCTFE		Special Fluoroplastics	Vespel®	PCTFE
Spring	SUS316				
Gasket	PCTFE and PTFE				
Gasket to seal for gauge	Ni				SUS316
Non-wetted Parts					
Bonnet	Nickel Plated Brass				
Cap	Nickel Plated Brass				
Control Knob	ABS Resin				
O-ring	NBR				

Wetted surface finishes

Standard Ra (GRADE "B"&"C")	32μin. (0.80μm) or less
Optional Ra (GRADE "A")	7μin. (0.18μm) or less

Standard connections

1/4" NPT body length 1.93in. (48mm)
1/4" face to face length of the male and female are the same. (Male) 3.23in. (82mm)
1/4" face to face length of the male and female are the same. (Female) 3.90in. (99mm)
1/4" sus tube fitting length 4.37in. (111mm)

[NOTE]
- Any combination of Face Seal male and/or female fittings are available for inlet and outlet.
- Size and configuration of pressure gauge port is 1/4" Face Seal male.

Ordering information

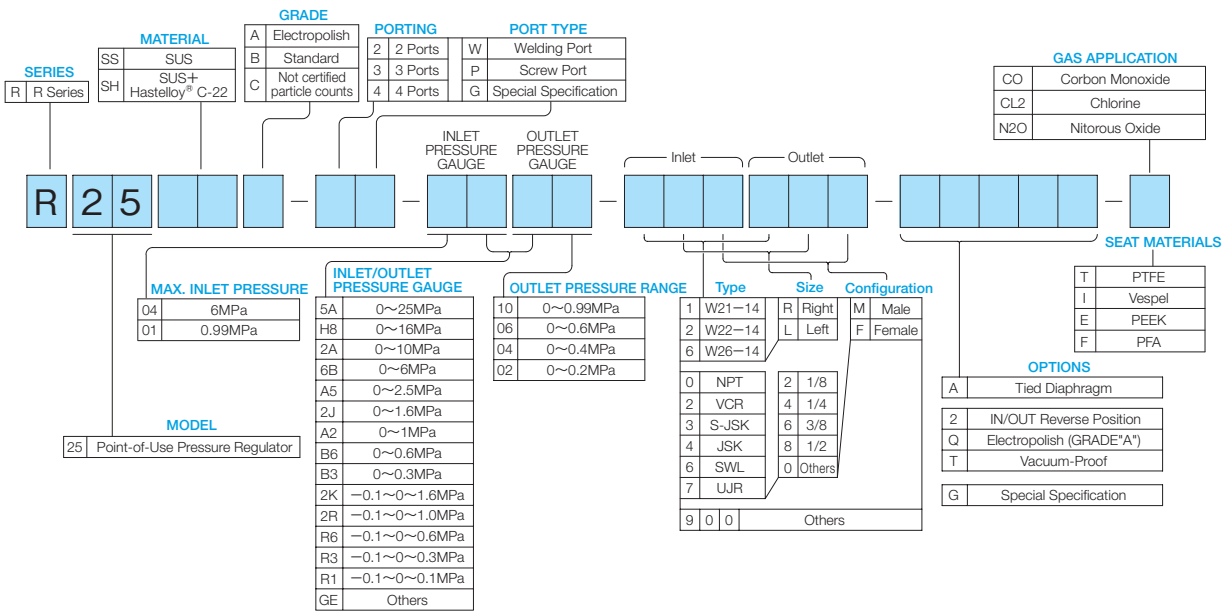

R26 Series

Point-of-Use Pressure Regulator

Inlet Pressure	Max.2 MPaG (Max.290 PSIG)
Outlet Pressure	Max.0.99 MPaG (Max.144 PSIG) (Pressure Range: 0～0.2 MPa, 0～0.4 MPa, 0～0.6 MPa, 0～0.99 MPa)
Supply Pressure Effect	0.0019 MPaG (0.27 PSIG) per 0.1 MPaG (14.5 PSIG)
Proof Pressure	22.2 MPa (3,219 PSI)
CV	0.18
Temperature	–10℃ to +40℃
Outboard Leakage	Screw (P); 1×10^{-9} Pa・m^3/sec・He (1×10^{-8} atm・cc/sec・He) Welding (W); 1×10^{-11} Pa・m^3/sec・He (1×10^{-10} atm・cc/sec・He)
Approximate weight	1.1 kg (21 lbs. 7 oz.)
Installation	Threaded holes on the surface (OPTIONS: Surface panel mounting)

[NOTE]
1MPa = 10.2 kgf/cm^2 = 145.04 PSI
1MPa = 7504.36 mmHg = 295.4 inHg

Cross sectional drawing

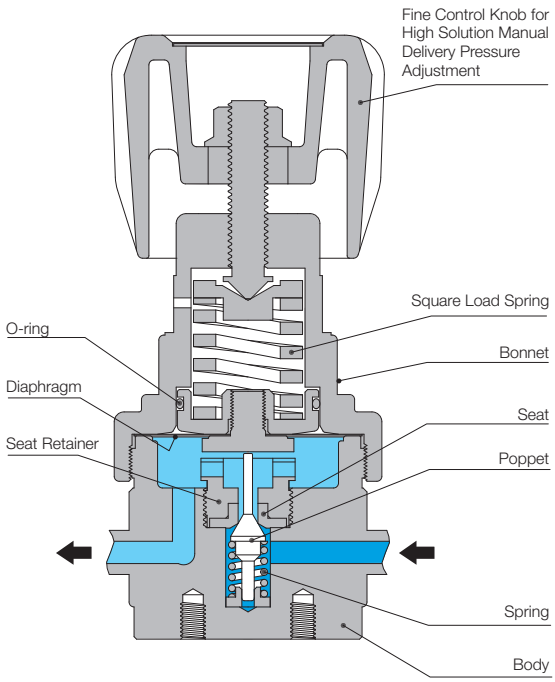

[NOTE]
- Avoid turning the control knob excessively.
- For purging at 870 PSIG (6 MPaG) and higher, operate the unit in consideration of changing the outlet pressure by the supply pressure effect.
- No filter in this unit.

Flow characteristics

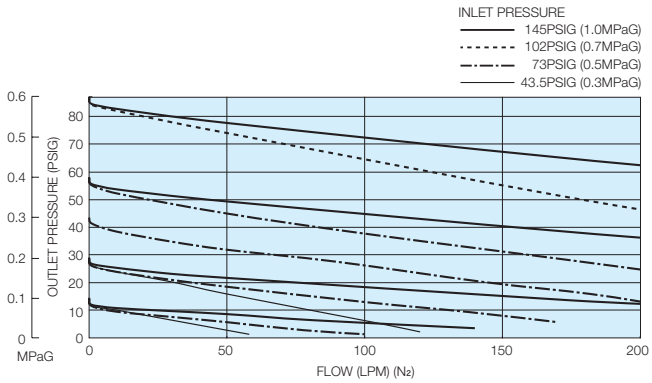

[NOTE]
- These tests were performed at ambient conditions.

Outline drawing

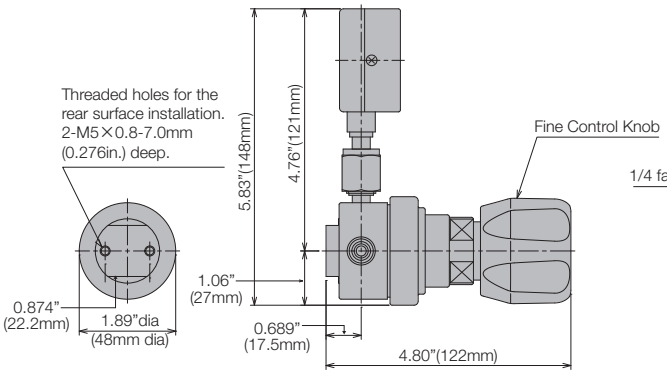

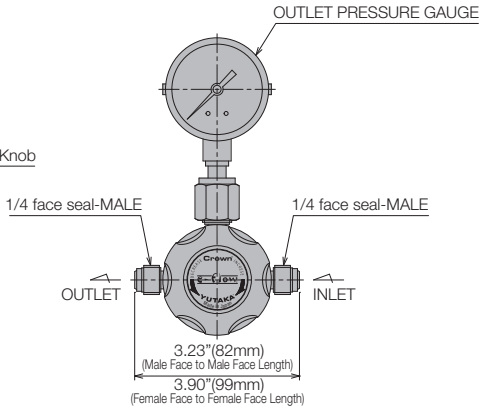

[NOTE]
- Dimensions are in inches and (mm) for reference only.
- Subject to change without notice.

Materials of construction

MODEL & TYPE	R26SS	R26SS-CO
Wetted Parts		
Body	SUS316L	
Poppet & Seat Retainer	SUS316L	
Diaphragm	SUS316L	
Seat	PTFE	
Spring	SUS316	
Gasket	PTFE	
Gasket to seal for gauge	Ni	SUS316
Non-wetted Parts		
Bonnet	Nickel Plated Brass	
Control Knob	ABS Resin	
O-ring	NBR	

Wetted surface finishes

Standard Ra (GRADE "B")	32μin. (0.80μm) or less
Optional Ra (GRADE "A")	7μin. (0.18μm) or less

Standard connections

1/4" NPT body length 1.93in. (48mm)
1/4" face to face length of the male and female are the same. (Male) 3.23in. (82mm)
1/4" face to face length of the male and female are the same. (Female) 3.90in. (99mm)
1/4" sus tube fitting length 4.37in. (111mm)

[NOTE]
- Any combination of Face Seal male and/or female fittings are available for inlet and outlet.
- Size and configuration of pressure gauge port is 1/4" Face Seal male.

Ordering information

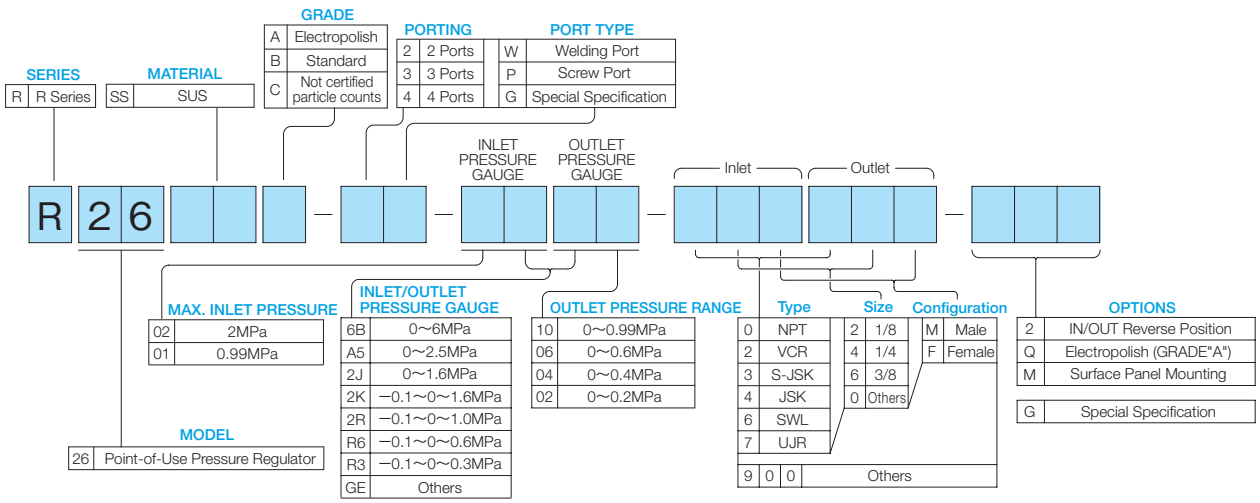

R35 Series

RoHS Directive Products

Medium Flow Applications

Inlet Pressure	Max.6 MPaG (Max.870 PSIG)
Outlet Pressure	Max.0.99 MPaG (Max.144 PSIG) (Pressure Range: 0～0.2 MPa, 0～0.4 MPa, 0～0.6 MPa, 0～0.99 MPa)
Supply Pressure Effect	0.0006 MPaG (0.087 PSIG) per 0.1 MPaG (14.5 PSIG)
Proof Pressure	9 MPa (1,305 PSI)
CV	0.35
Temperature	–10℃ to +40℃
Outboard Leakage	Screw (P); 1×10^{-9} Pa・m^3/sec・He (1×10^{-8} atm・cc/sec・He) Welding (W); 1×10^{-11} Pa・m^3/sec・He (1×10^{-10} atm・cc/sec・He)
Internal Volume	19.74 cc (1.2 in^3) w/o fittings
Approximate weight	1.95 kg (4 lbs. 5 oz.)
Installation	Threaded holes on the rear surface or Panel mounting

[NOTE]
1MPa = 10.2 kgf/cm^2 = 145.04 PSI
1MPa = 7504.36 mmHg = 295.4 inHg

Cross sectional drawing

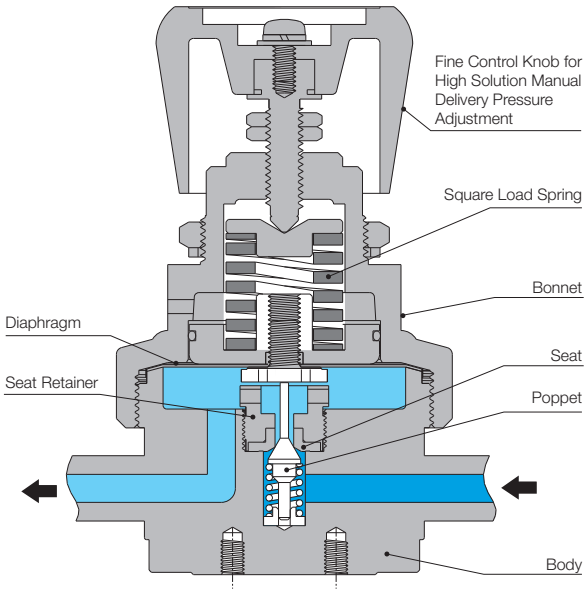

[NOTE]
- Avoid turning the control knob excessively.
- For purging at 870 PSIG (6 MPaG) and higher, operate the unit in consideration of changing the outlet pressure by the supply pressure effect.
- No filter in this unit.

Flow characteristics

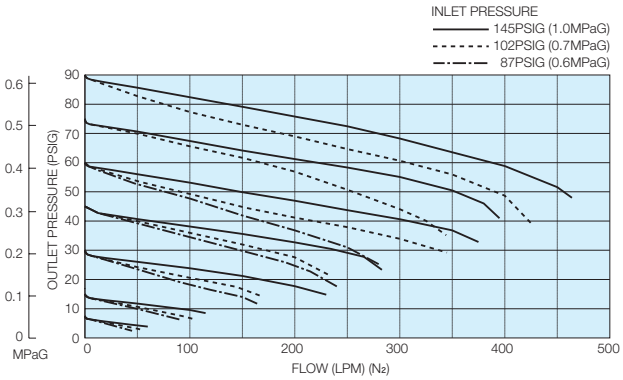

[NOTE]
- These tests were performed at ambient conditions.

Outline drawing

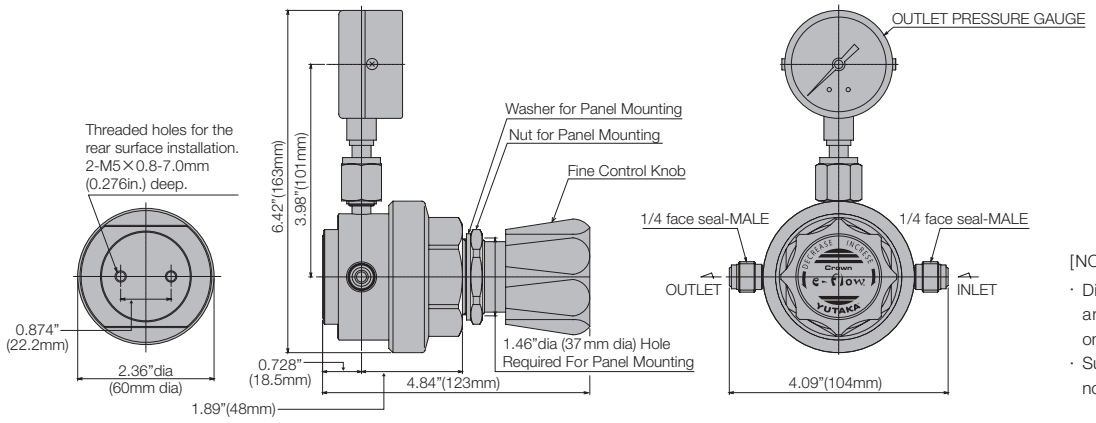

[NOTE]
- Dimensions are in inches and (mm) for reference only.
- Subject to change without notice.

Materials of construction

MODEL & TYPE	R35SS	R35SH	R35SH-CL2	R35SS-N20	R35SS-CO
Wetted Parts					
Body	SUS316L				
Poppet & Seat Retainer	SUS316L	Hastelloy® C-22		SUS316L	
Diaphragm	SUS316L	Hastelloy® C-22		SUS316L	
Seat	PCTFE		Special Fluoroplastics	Vespel®	PCTFE
Spring	SUS316				
Gasket	PTFE				
Gasket to seal for gauge	Ni				SUS316
Non-wetted Parts					
Bonnet	Nickel Plated Brass				
Control Knob	ABS Resin				
O-ring	NBR				

Wetted surface finishes

Standard Ra (GRADE "B"&"C")	32μin. (0.80μm) or less
Optional Ra (GRADE "A")	7μin. (0.18μm) or less

Standard connections

1/4" NPT body length 2.36in. (60mm)
1/4" face to face length of the male and female are the same. (Male) 4.09in. (104mm)
1/4" face to face length of the male and female are the same. (Female) 4.33in. (110mm)
3/8", 1/2" face to face length of the male and female are the same. 4.72in. (120mm)
3/8" sus tube fitting length 4.96in. (126mm)

[NOTE]
- Any combination of Face Seal male and/or female fittings are available for inlet and outlet.
- Size and configuration of pressure gauge port is 1/4" Face Seal male.

Ordering information

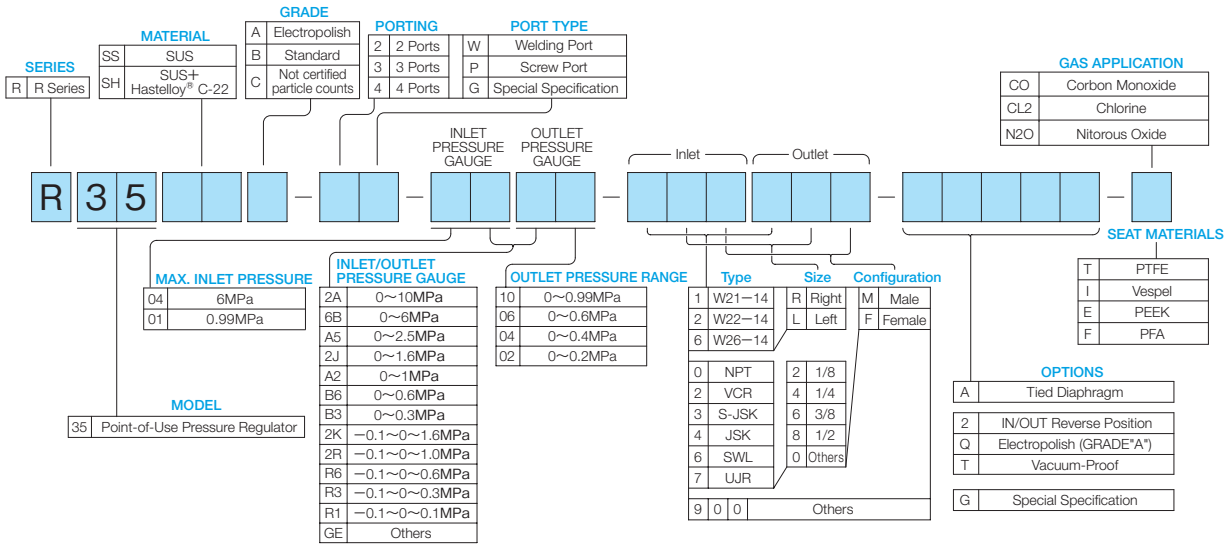

R36 Series

Medium Flow Rate Applications

Inlet Pressure	Max.2 MPaG (Max.290 PSIG)
Outlet Pressure	Max.0.99 MPaG (Max.144 PSIG) (Pressure Range: 0～0.2 MPa, 0～0.4 MPa, 0～0.6 MPa, 0～0.99 MPa)
Supply Pressure Effect	0.0034 MPaG (0.49 PSIG) per 0.1 MPaG (14.5 PSIG)
Proof Pressure	9 MPa (1,305 PSI)
CV	0.62
Temperature	–10℃ to +40℃
Outboard Leakage	Screw (P); 1×10^{-9} Pa・m^3/sec・He (1×10^{-8} atm・cc/sec・He) Welding (W); 1×10^{-11} Pa・m^3/sec・He (1×10^{-10} atm・cc/sec・He)
Approximate weight	1.7 kg (3 lbs. 12 oz.)
Installation	Threaded holes on the surface (OPTIONS: Surface panel mounting)

[NOTE]
1MPa = 10.2 kgf/cm^2 = 145.04 PSI
1MPa = 7504.36 mmHg = 295.4 inHg

Cross sectional drawing

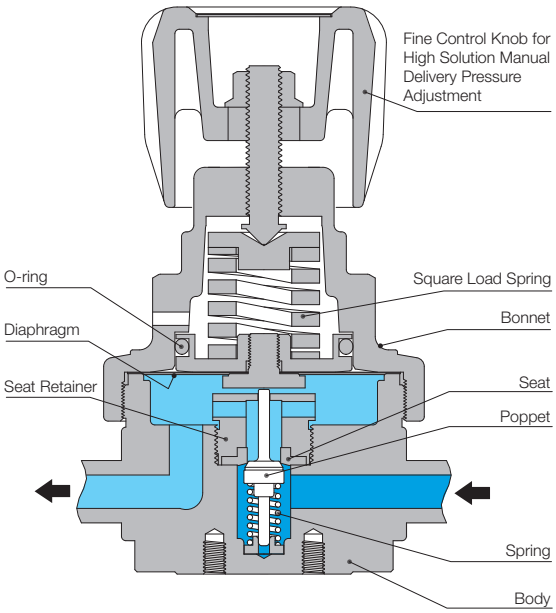

[NOTE]
・Avoid turning the control knob excessively.
・No filter in this unit.

Flow characteristics

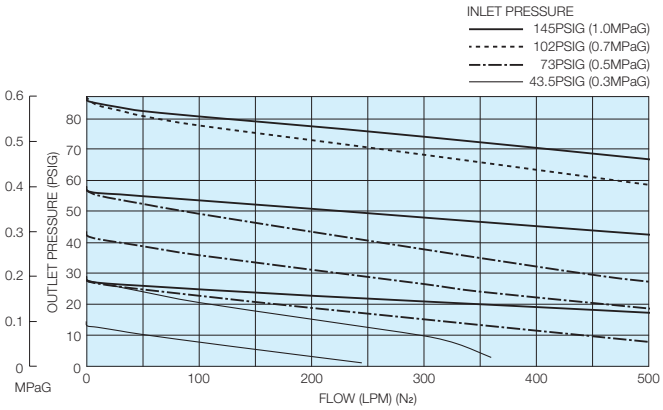

[NOTE]
・These tests were performed at ambient conditions.

Outline drawing

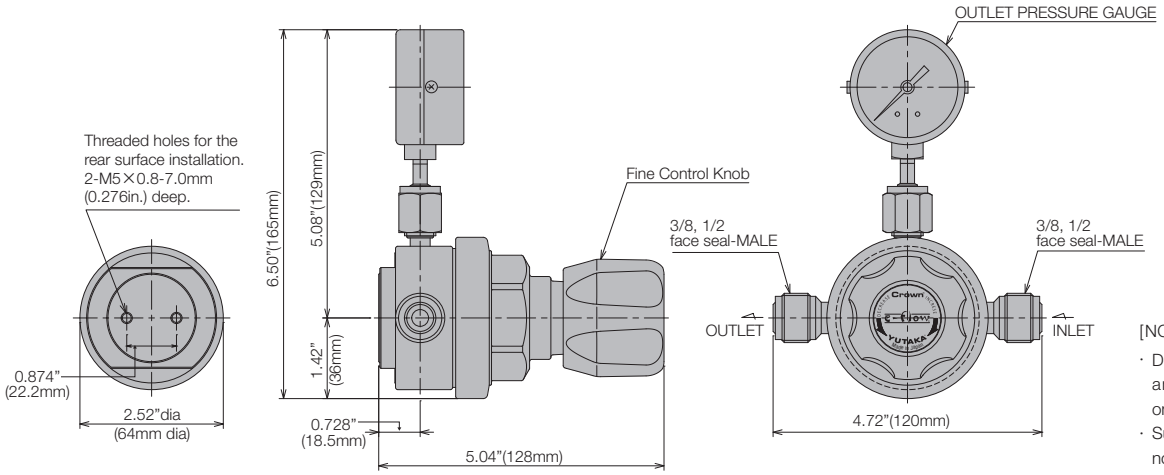

[NOTE]
- Dimensions are in inches and (mm) for reference only.
- Subject to change without notice.

Materials of construction

MODEL & TYPE	R36SS	R36SS-CO
Wetted Parts		
Body	SUS316L	
Poppet & Seat Retainer	SUS316L	
Diaphragm	SUS316L	
Seat	PCTFE	
Spring	SUS316	
Gasket	PTFE	
Gasket to seal for gauge	Ni	SUS316
Non-wetted Parts		
Bonnet	Nickel Plated Brass	
Control Knob	ABS Resin	
O-ring	NBR	

Wetted surface finishes

Standard Ra (GRADE "B")	32μin. (0.80μm) or less
Optional Ra (GRADE "A")	7μin. (0.18μm) or less

Standard connections

3/8" NPT body length 2.52in. (64mm)
3/8", 1/2" face to face length of the male and female are the same. 4.72in. (120mm)
3/8" sus tube fitting length 5.24in. (133mm)

[NOTE]
- Any combination of Face Seal male and/or female fittings are available for inlet and outlet.
- Size and configuration of pressure gauge port is 1/4" Face Seal male.

Ordering information

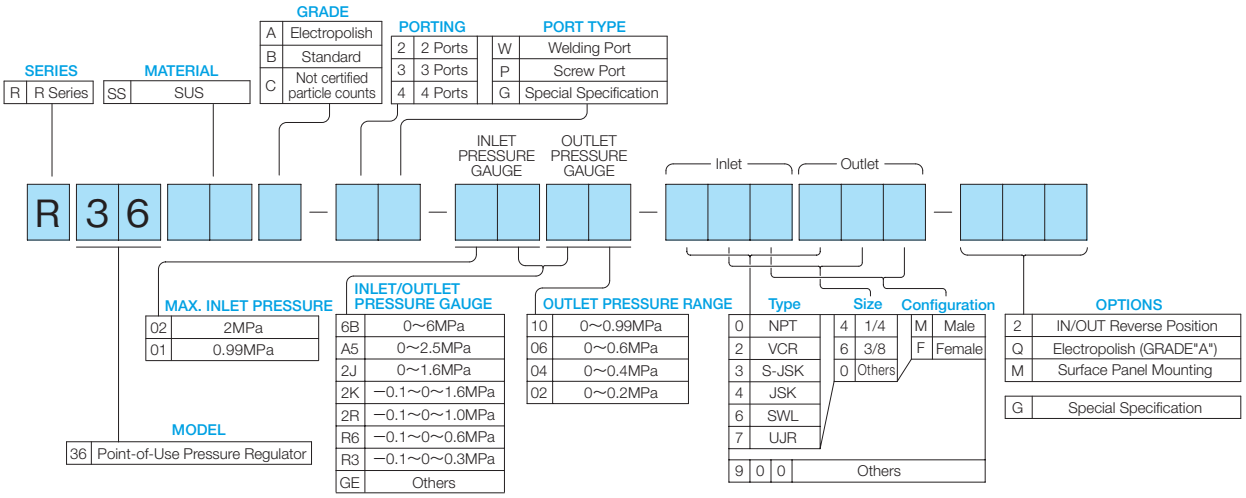

R61 Series

High Flow Rate Applications

Inlet Pressure	Max.24 MPaG (Max.3,480 PSIG)
Outlet Pressure	Max.0.99 MPaG (Max.144 PSIG) (Pressure Range: 0~0.2 MPa, 0~0.4 MPa, 0~0.6 MPa, 0~0.99 MPa)
Supply Pressure Effect	0.001 MPaG (0.145 PSIG) per 0.1 MPaG (14.5 PSIG)
Proof Pressure	31.5 MPa (4,567 PSI), 1.5 MPa (Outlet Side)
CV	0.31
Temperature	−10℃ to +40℃
Outboard Leakage	Screw (P); 1×10^{-9} Pa・m^3/sec・He (1×10^{-8} atm・cc/sec・He) Welding (W); 1×10^{-11} Pa・m^3/sec・He (1×10^{-10} atm・cc/sec・He)
Internal Volume	25.3 cc (1.54 in^3) w/o fittings
Approximate weight	2.0 kg (4 lbs. 7 oz.)
Installation	Threaded holes on the rear surface or Panel mounting

[NOTE]
1MPa = 10.2 kgf/cm^2 = 145.04 PSI
1MPa = 7504.36 mmHg = 295.4 inHg

Cross sectional drawing

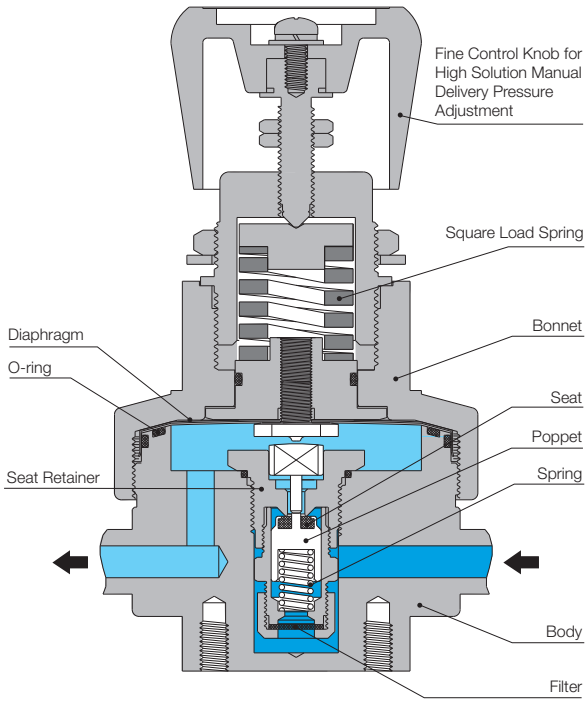

[NOTE]
・Avoid turning the control knob excessively.

Flow characteristics

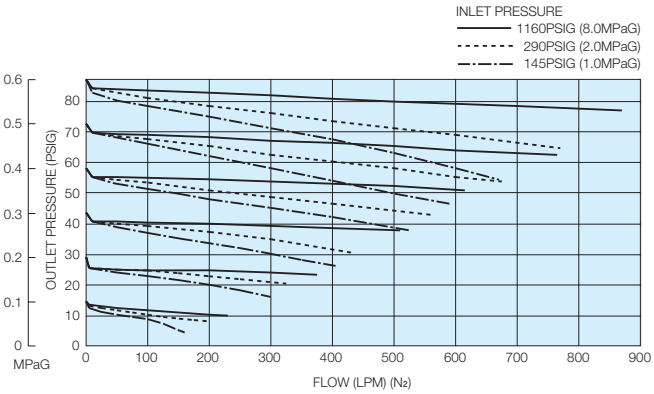

[NOTE]
・These tests were performed at ambient conditions.

Outline drawing

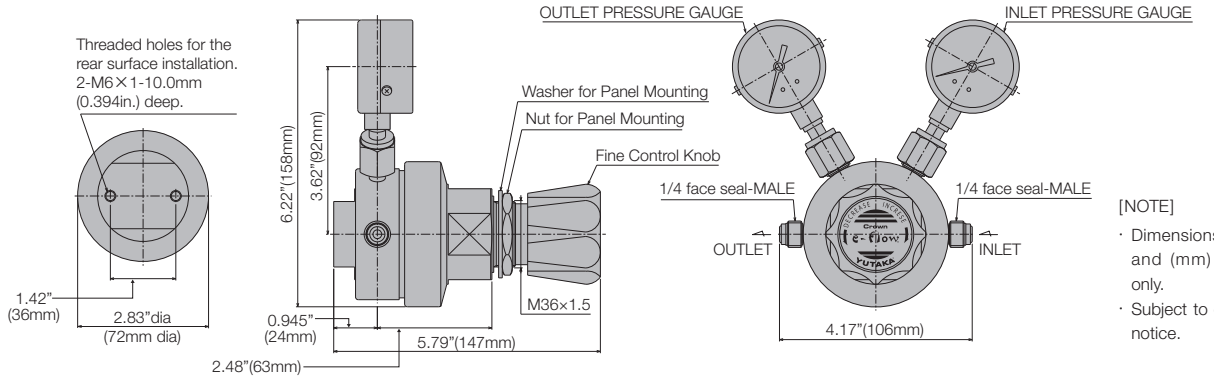

[NOTE]
- Dimensions are in inches and (mm) for reference only.
- Subject to change without notice.

Materials of construction

MODEL & TYPE	R61SS
Wetted Parts	
Body	SUS316
Poppet & Seat Retainer	SUS316
Diaphragm	SUS316L
Seat	PCTFE
Spring	SUS316
Gasket	PTFE
Gasket to seal for gauge	Ni
Non-wetted Parts	
Bonnet	Chromium Plated Brass
Control Knob	ABS Resin
O-ring	NBR

Wetted surface finishes

Standard Ra (GRADE "B"&"C")	32μin. (0.80μm) or less
Optional Ra (GRADE "A")	7μin. (0.18μm) or less

Standard connections

1/4" NPT body length 2.83in. (72mm)
1/4" face to face length of the male and female are the same. (Male) 4.17in. (106mm)
1/4" face to face length of the male and female are the same. (Female) 4.84in. (123mm)
3/8", 1/2" face to face length of the male and female are the same. 5.20in. (132mm)

[NOTE]
- Any combination of Face Seal male and/or female fittings are available for inlet and outlet.
- Size and configuration of pressure gauge port is 1/4" Face Seal male.

Ordering information

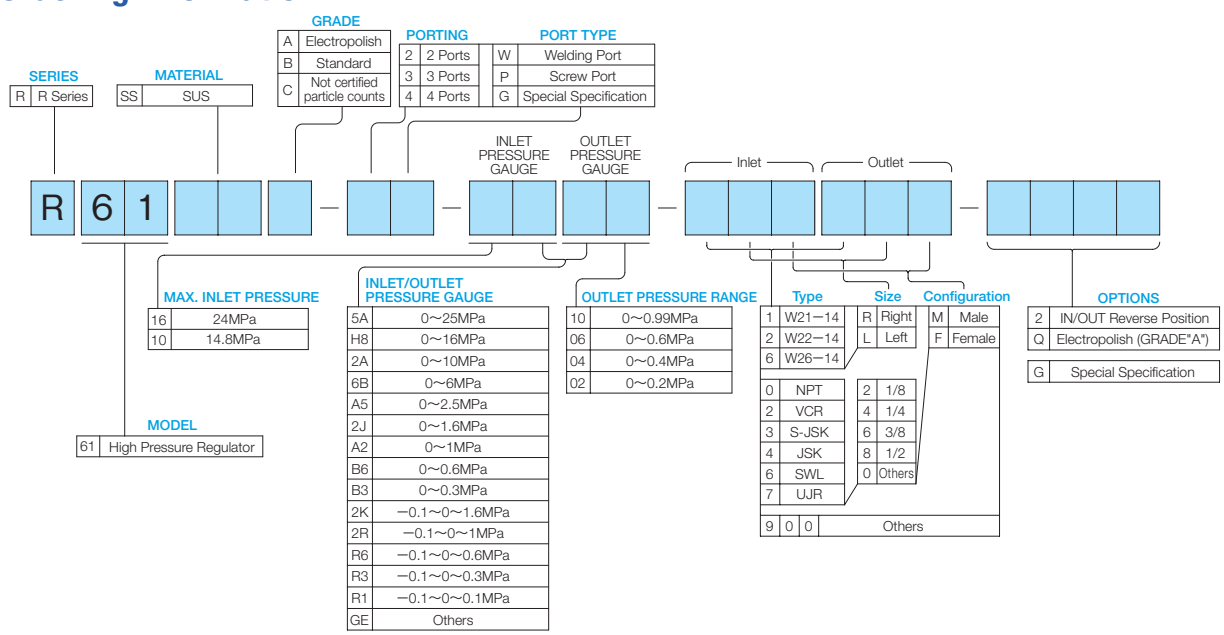

R72 Series

High Delivery Pressure Regulator

Inlet Pressure	Max.21 MPaG (Max.3046 PSIG)
Outlet Pressure	Max.15 MPaG (Max.2176 PSIG) (Pressure Renge:0～4 MPa, 0～6 MPa, 0～10 MPa, 0～15 MPa)
Supply Pressure Effect	0.007 MPaG (0.1 PSIG) per 0.1 MPaG (14.5 PSIG)
Proof Pressure	31.5 MPa (4567 PSIG), 22.5 MPa (Outlet Side)
Temperature	–10°C to +40°C
Outboard Leakage	Screw (P); 1×10^{-9} Pa・m^3/sec・He (1×10^{-8} atm・cc/sec・He) Welding (W); 1×10^{-11} Pa・m^3/sec・He (1×10^{-10} atm・cc/sec・He)
Internal Volume	3.66 cc (0.22 in^3) w/o fittings
Approximate weight	1.9 kg (4 lbs. 3 oz.)
Installation	Threaded holes on the rear surface or Panel mounting

[NOTE]
1MPa = 10.2 kgf/cm^2 = 145.04 PSI
1MPa = 7504.36 mmHg = 295.4 inHg

Cross sectional drawing

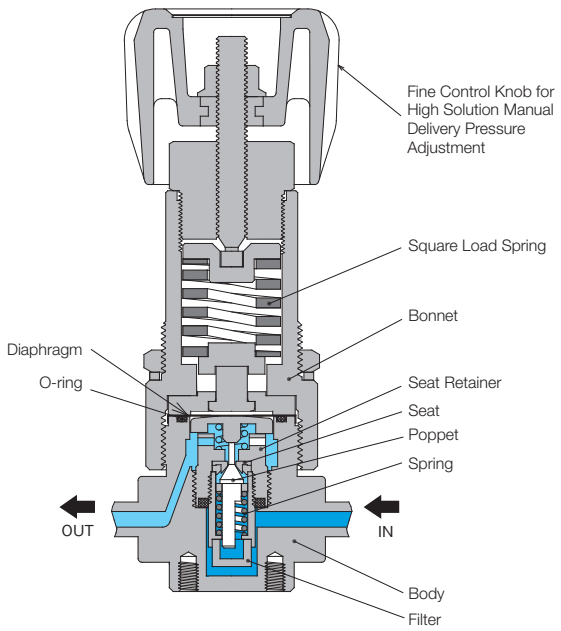

[NOTE]
・Avoid turning the control knob excessively.

Flow characteristics

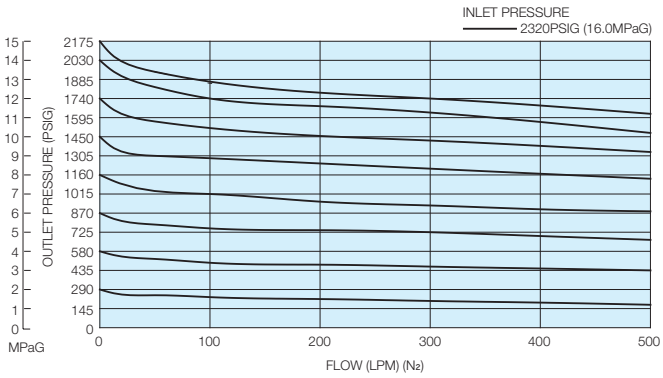

[NOTE]
・These tests were performed at ambient conditions.

Outline drawing

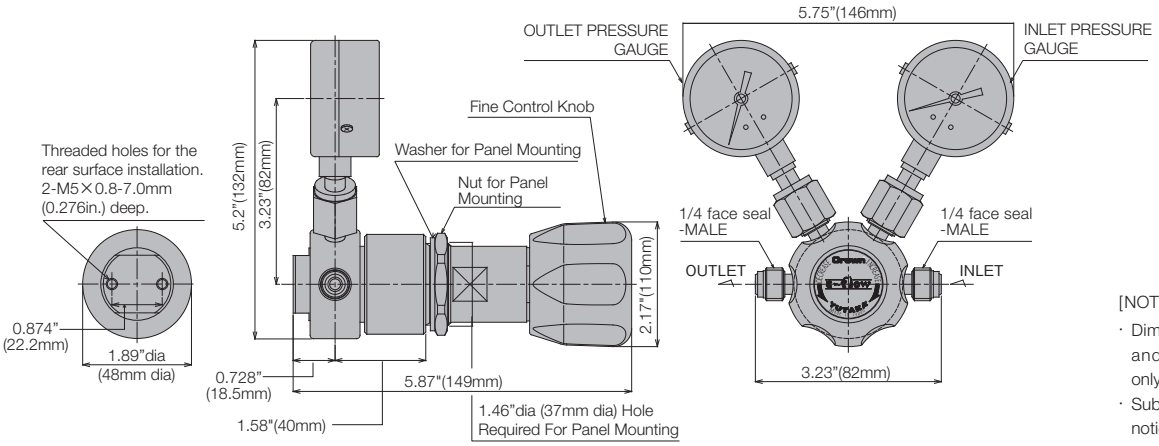

[NOTE]
- Dimensions are in inches and (mm) for reference only.
- Subject to change without notice.

Materials of construction

MODEL & TYPE	R72SS	R72SS-CO
Wetted Parts		
Body	SUS316L	
Poppet	SUS316L	
Seat Retainer	SUS316	
Diaphragm	SUS316L	
Seat	PCTFE	
Spring	SUS316	
Gasket	PTFE	
Gasket to seal for gauge	Ni	SUS316
Non-wetted Parts		
Bonnet	SUS304	
Control Knob	SUS304	

Wetted surface finishes

Standard Ra (GRADE "B"&"C")	32μin. (0.80μm) or less
Optional Ra (GRADE "A")	7μin. (0.18μm) or less

Standard connections

1/4" NPT body length 1.93in. (48mm)
1/4" face to face length of the male and female are the same. (Male) 3.23in. (82mm)
1/4" face to face length of the male and female are the same. (Female) 3.90in. (99mm)
1/4" sus tube fitting length 4.37in. (111mm)

[NOTE]
- Any combination of Face Seal male and/or female fittings are available for inlet and outlet.
- Size and configuration of pressure gauge port is 1/4" Face Seal male.

Ordering information

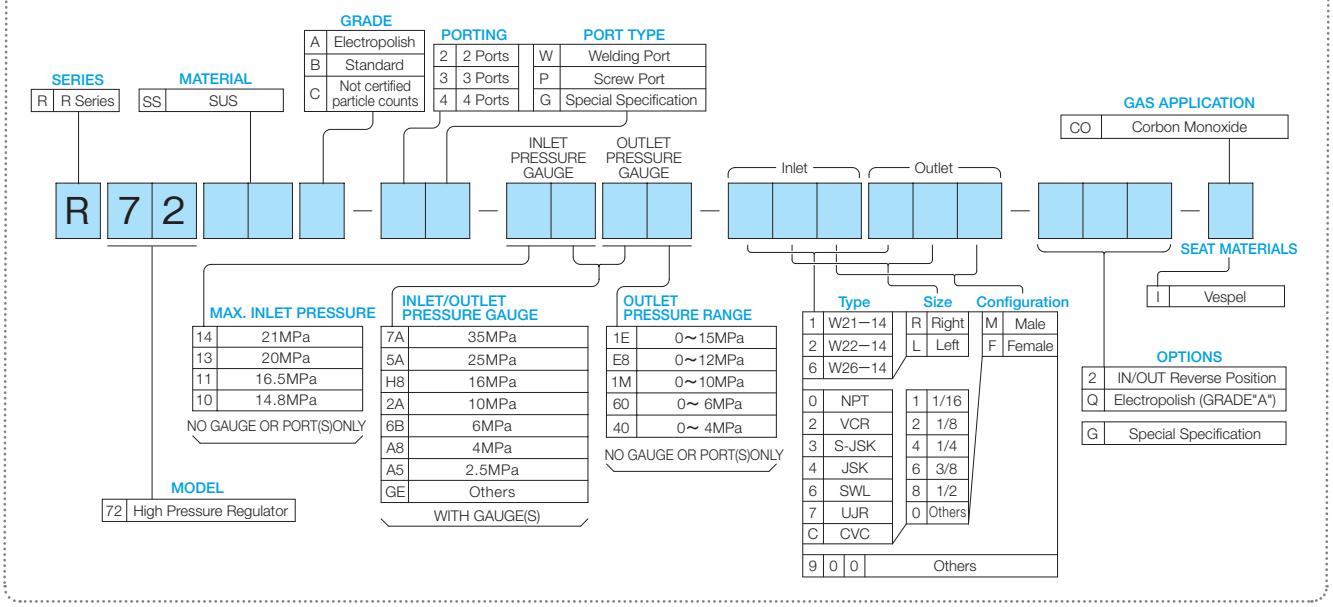

R81 Series

Minimizes Supply Pressure Effect

Inlet Pressure	Max.24 MPaG (Max.3,480 PSIG)
Outlet Pressure	Max.0.6 MPaG (Max.87 PSIG) (Pressure Range: 0~0.2 MPa, 0~0.4 MPa, 0~0.6 MPa)
Supply Pressure Effect	0.00004 MPaG (0.0058 PSIG) per 0.1 MPaG (14.5 PSIG)
Proof Pressure	31.5 MPa (4,567 PSIG)
Temperature	–10°C to +40°C
Outboard Leakage	Screw (P); 1×10^{-9} Pa • m^3/sec • He (1×10^{-8} atm • cc/sec • He) Welding (W); 1×10^{-11} Pa • m^3/sec • He (1×10^{-10} atm • cc/sec • He)
Internal Volume	14.5 cc (0.88 in^3) w/o fittings
Approximate weight	2.4 kg (5 lbs. 5 oz.)
Installation	Threaded holes on the rear surface or Panel mounting

[NOTE]
1MPa = 10.2 kgf/cm^2 = 145.04 PSI
1MPa = 7504.36 mmHg = 295.4 inHg

Cross sectional drawing

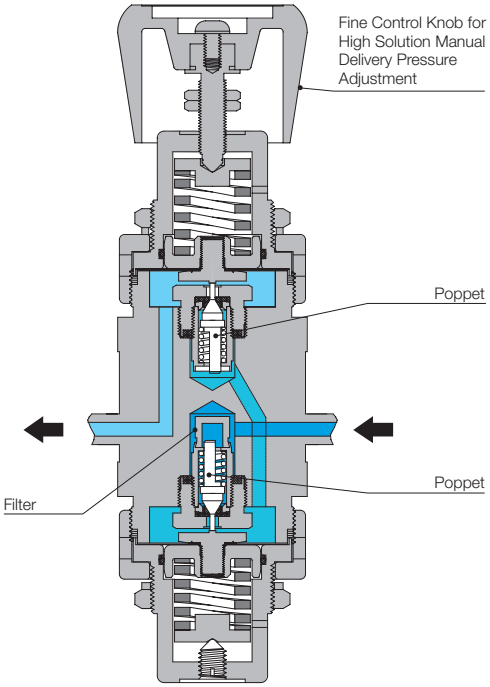

[NOTE]
· Avoid turning the control knob excessively.

Tied Diaphragm (Optional)

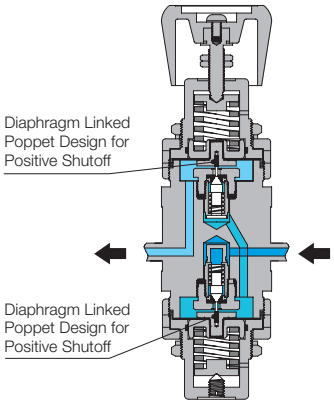

[NOTE]
Operating the Tied Diaphragm Type: In order to minimize premature wear of regulator's internal parts. Be sure not to close regulator while under pressure.

Flow characteristics

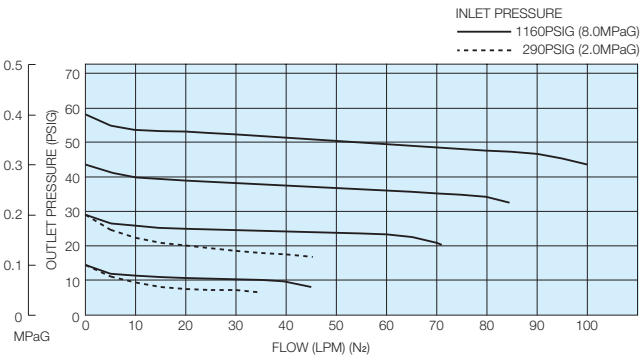

[NOTE]
· These tests were performed at ambient conditions.

Outline drawing

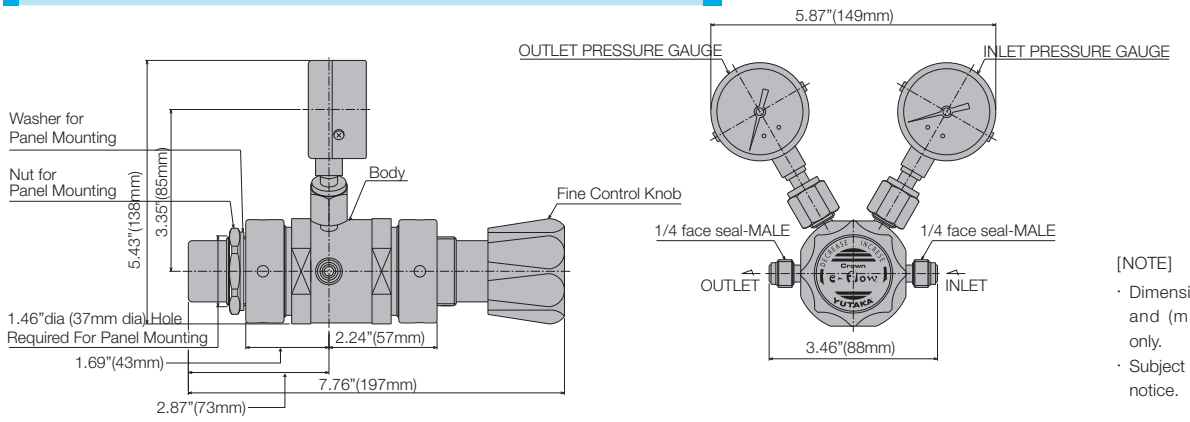

[NOTE]
- Dimensions are in inches and (mm) for reference only.
- Subject to change without notice.

Materials of construction

MODEL & TYPE	R81SS	R81SH	R81SS-N20	R81SS-CO
Wetted Parts				
Body	SUS316L			
Poppet	SUS316L	Hastelloy® C-22	SUS316L	
Seat Retainer	SUS316	Hastelloy® C-22	SUS316	
Diaphragm	SUS316L	Hastelloy® C-22	SUS316L	
Seat	PCTFE		Vespel®	PCTFE
Spring	SUS316			
Gasket	PCTFE and PTFE		PTFE and Vespel®	PCTFE and PTFE
Gasket to seal for gauge	Ni			SUS316
Non-wetted Parts				
Bonnet	Nickel Plated Brass			
Control Knob	ABS Resin			
O-ring	NBR			

Wetted surface finishes

Standard Ra (GRADE "B"&"C")	32μin. (0.80μm) or less
Optional Ra (GRADE "A")	7μin. (0.18μm) or less

Standard connections

1/4" NPT body length 2.13in. (54mm)
1/4" face to face length of the male and female are the same. (Male) 3.46in. (88mm)
1/4" face to face length of the male and female are the same. (Female) 4.13in. (105mm)

[NOTE]
- Any combination of Face Seal male and/or female fittings are available for inlet and outlet.
- Size and configuration of pressure gauge port is 1/4" Face Seal male.

Ordering information

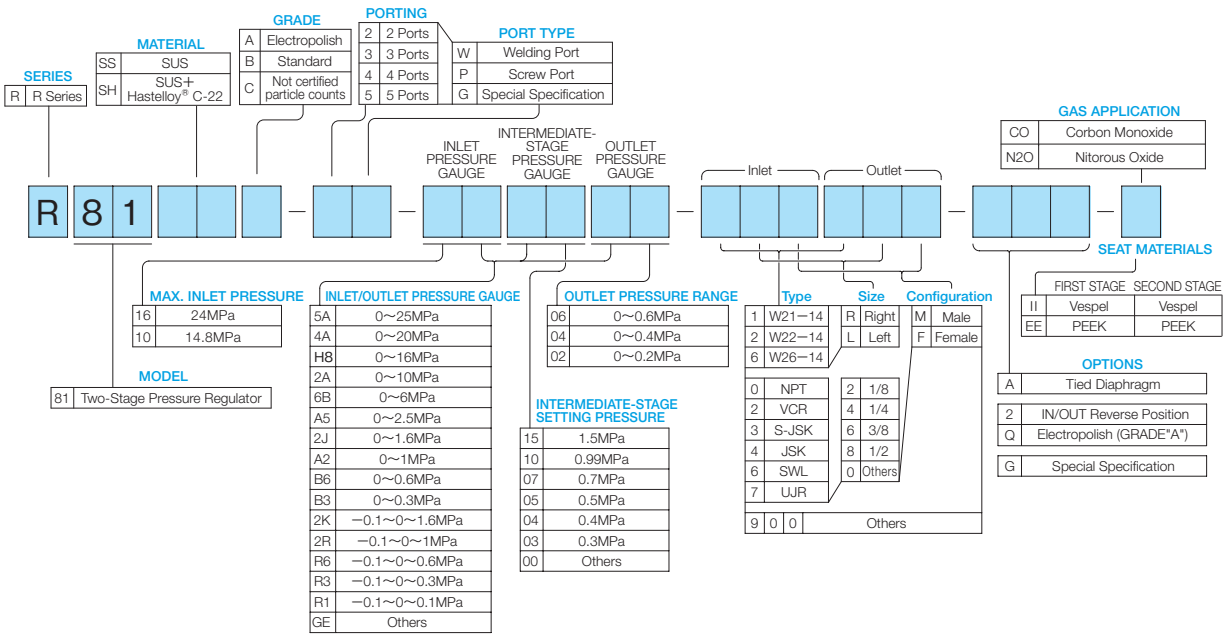

RH1 Series

High Flow Rate Applications

Inlet Pressure	Max.6 MPaG (Max.870 PSIG)
Outlet Pressure	Max.0.99 MPaG (Max.144 PSIG) (Pressure Range: 0~0.2 MPa, 0~0.4 MPa, 0~0.6 MPa, 0~0.99 MPa)
Supply Pressure Effect	0.0019 MPaG (0.28 PSIG) per 0.1 MPaG (14.5 PSIG)
Proof Pressure	9.0 MPa (1,305 PSI)
CV	0.69
Temperature	–10℃ to +40℃
Outboard Leakage	Screw (P); 1×10^{-9} Pa • m^3/sec • He (1×10^{-8} atm • cc/sec • He) Welding (W); 1×10^{-11} Pa • m^3/sec • He (1×10^{-10} atm • cc/sec • He)
Internal Volume	47.2 cc (2.85 in^3) w/o fittings
Approximate weight	2.7 kg (5 lbs. 15 oz.)
Installation	Threaded holes on the rear surface or Panel mounting

[NOTE]
1MPa = 10.2 kgf/cm^2 = 145.04 PSI
1MPa = 7504.36 mmHg = 295.4 inHg

Cross sectional drawing

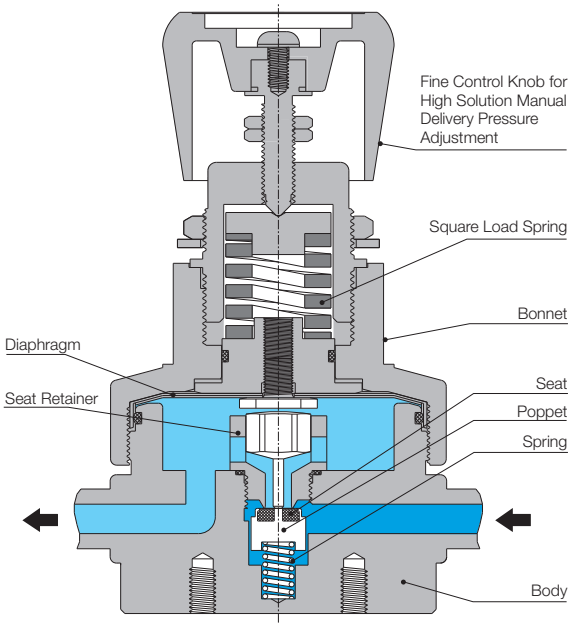

[NOTE]
· Avoid turning the control knob excessively.
· No filter in this unit.

Flow characteristics

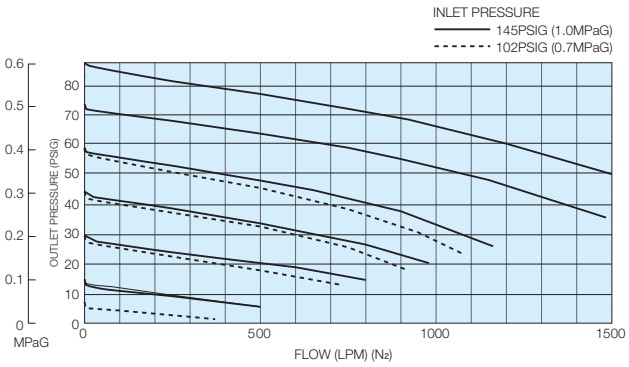

[NOTE]
· These tests were performed at ambient conditions.

Outline drawing

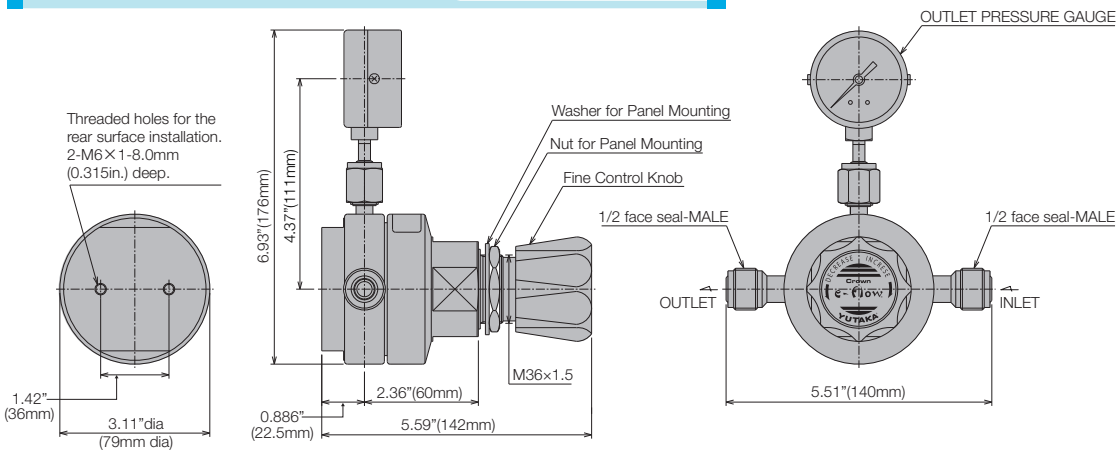

[NOTE]
- Dimensions are in inches and (mm) for reference only.
- Subject to change without notice.

Materials of construction

MODEL & TYPE	RH1SS	RH1SH
Wetted Parts		
Body	SUS316L	
Poppet & Seat Retainer	SUS316	Hastelloy® C-22
Diaphragm	SUS316L	
Seat	PTFE	
Spring	SUS316	
Gasket	PTFE	
Gasket to seal for gauge	Ni	
Non-wetted Parts		
Bonnet	Chromium Plated Brass	
Control Knob	ABS Resin	
O-ring	NBR	

Wetted surface finishes

Standard Ra (GRADE "B"&"C")	32μin. (0.80μm) or less
Optional Ra (GRADE "A")	7μin. (0.18μm) or less

Standard connections

3/8" NPT body length 3.11in. (79mm)
3/8", 1/2" face to Face length of the male and female are the same. 5.51in. (140mm)
3/8", 1/2" Tube stubs and other connections available as options.

[NOTE]
- Any combination of Face Seal male and/or female fittings are available for inlet and outlet.
- Size and configuration of pressure gauge port is 1/4" Face Seal male.

Ordering information

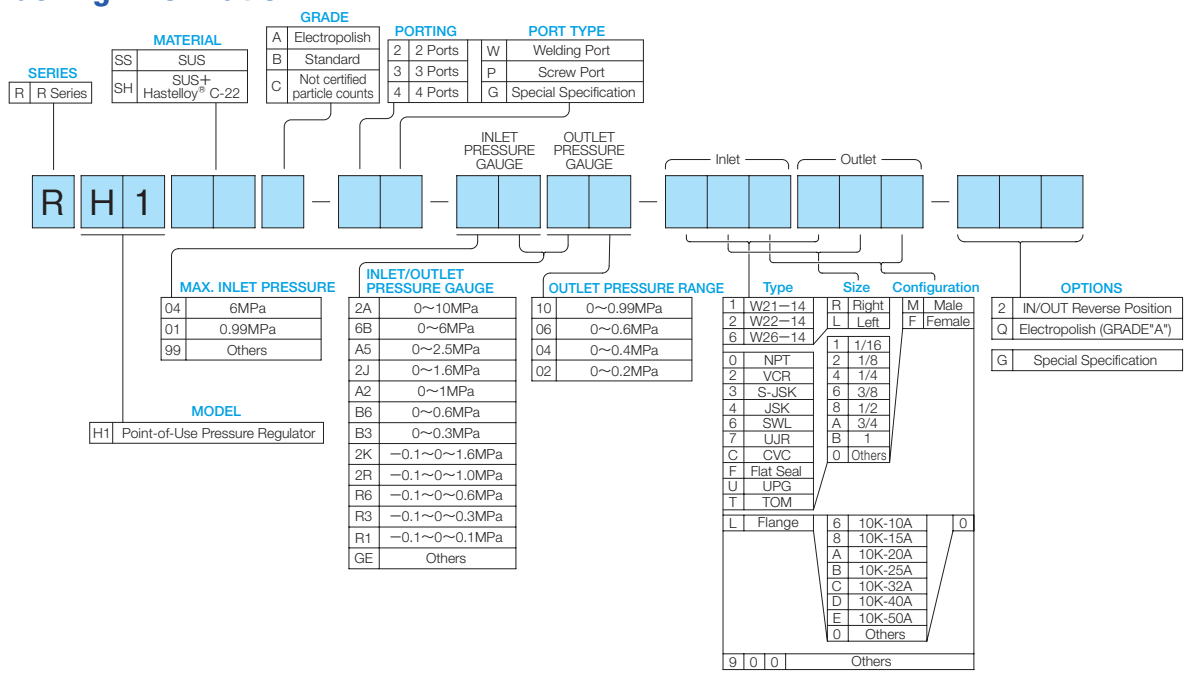

RH2 Series

High Flow Rate Applications

Inlet Pressure	Max.2 MPaG (Max.290 PSIG)
Outlet Pressure	Max.0.99 MPaG (Max.144 PSIG) (Pressure Range: 0～0.2 MPa, 0～0.4 MPa, 0～0.6 MPa, 0～0.99 MPa)
Supply Pressure Effect	0.0082 MPaG (1.19 PSIG) per 0.1 MPaG (14.5 PSIG)
Proof Pressure	22.2 MPa (3,215 PSI)
CV	0.84
Temperature	–10℃ to +40℃
Outboard Leakage	Screw (P); 1×10^{-9} Pa・m^3/sec・He (1×10^{-8} atm・cc/sec・He) Welding (W); 1×10^{-11} Pa・m^3/sec・He (1×10^{-10} atm・cc/sec・He)
Approximate weight	2.8 kg (6 lbs. 5 oz.)
Installation	Threaded holes on the rear surface (OPTIONS: Surface panel mounting)

[NOTE]
1MPa = 10.2 kgf/cm^2 = 145.04 PSI
1MPa = 7504.36 mmHg = 295.4 inHg

Cross sectional drawing

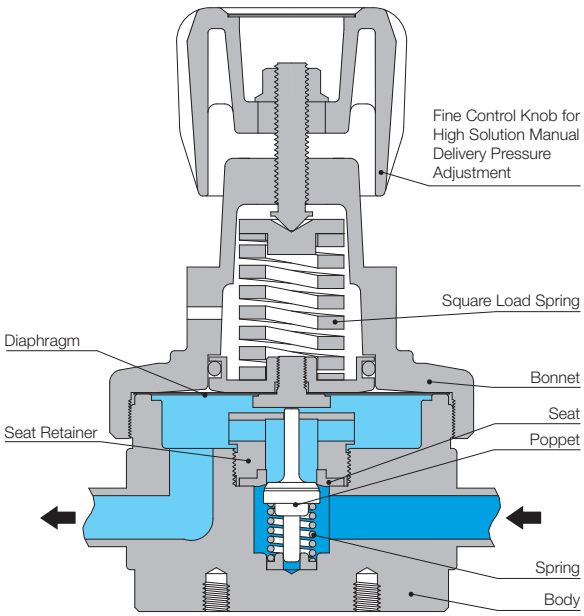

[NOTE]
・Avoid turning the control knob excessively.
・No filter in this unit.

Flow characteristics

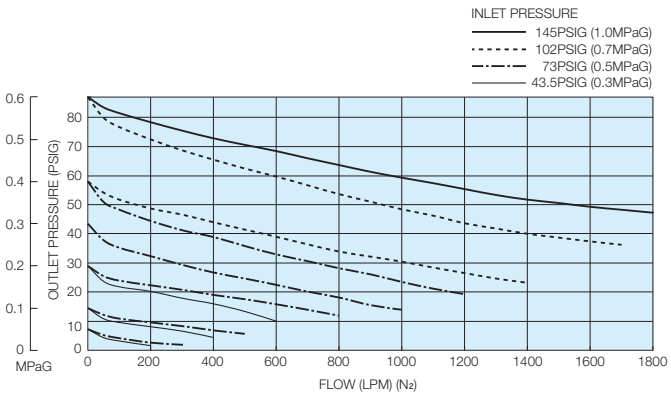

[NOTE]
・These tests were performed at ambient conditions.

Outline drawing

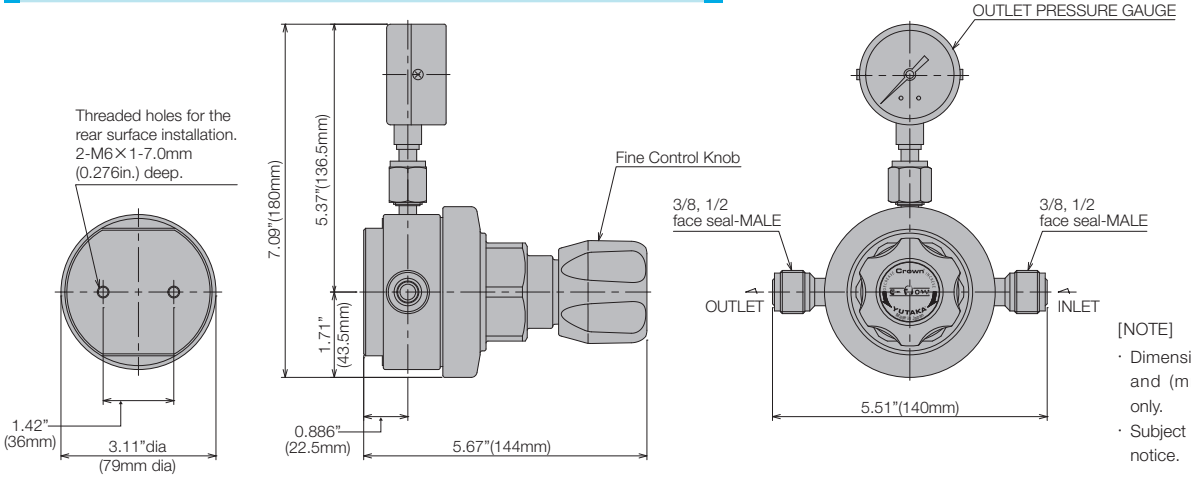

[NOTE]
- Dimensions are in inches and (mm) for reference only.
- Subject to change without notice.

Materials of construction

MODEL & TYPE	RH2SSC	RH2SS-CO
Wetted Parts		
Body	SUS316L	
Poppet & Seat Retainer	SUS316L	
Diaphragm	SUS316L	
Seat	PCTFE	
Spring	SUS316	
Gasket	PTFE	
Gasket to seal for gauge	Ni	SUS316
Non-wetted Parts		
Bonnet	Chromium Plated Brass	
Control Knob	ABS Resin	
O-ring	NBR	

Wetted surface finishes

Standard Ra (GRADE "B")	32μin. (0.80μm) or less
Optional Ra (GRADE "A")	7μin. (0.18μm) or less

Standard connections

1/2" NPT body length 3.11in. (79mm)
3/8", 1/2" face to face length of the male and female are the same. 5.51in. (140mm)
1/2" sus tube fitting length 5.98in. (152mm)

[NOTE]
- Any combination of Face Seal male and/or female fittings are available for inlet and outlet.
- Size and configuration of pressure gauge port is 1/4" Face Seal male.

Ordering information

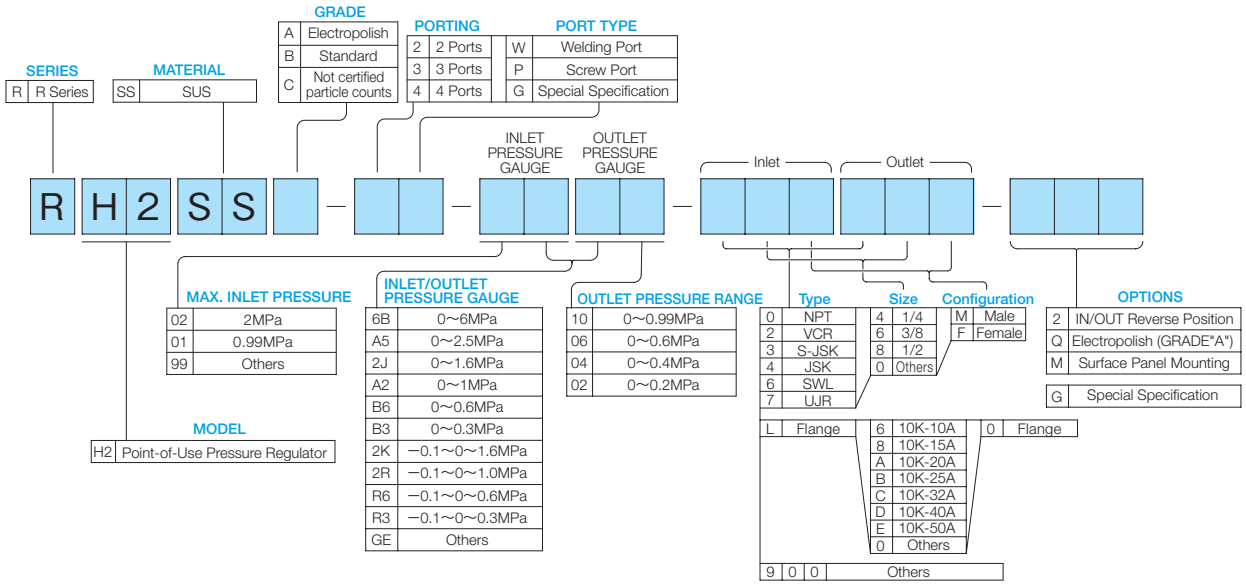

RLD Series

Dome Loaded Pressure Regulator Designed for Remote Operation in High Flow Rate Applications

Inlet Pressure	Max.2 MPaG (Max.290 PSIG)
Outlet Pressure	Max.0.8 MPaG (Max.116 PSIG)
CV	11.3
Approximate weight	19 kg (41 lbs. 14 oz.)

[NOTE]
1MPa = 10.2 kgf/cm^2 = 145.04 PSI
1MPa = 7504.36 mmHg = 295.4 inHg

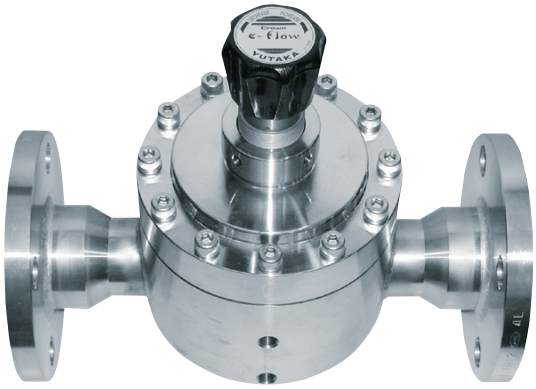

Cross sectional drawing

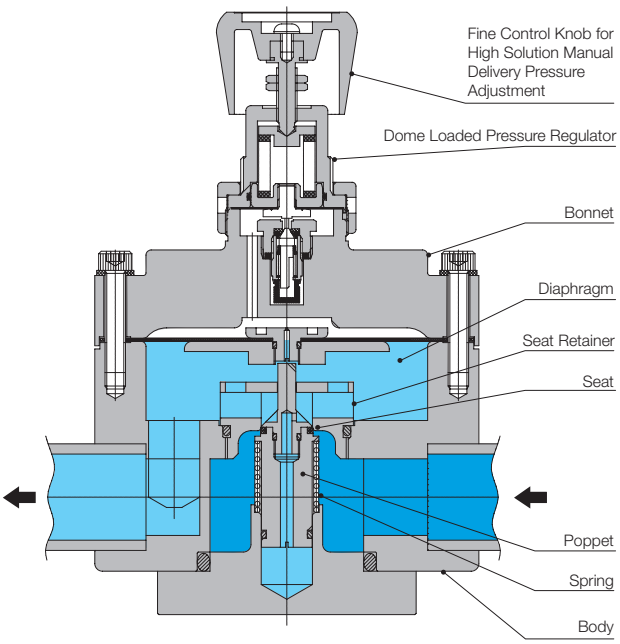

[NOTE]
· Avoid turning the control knob excessively.
· No filter in this unit.

Flow characteristics

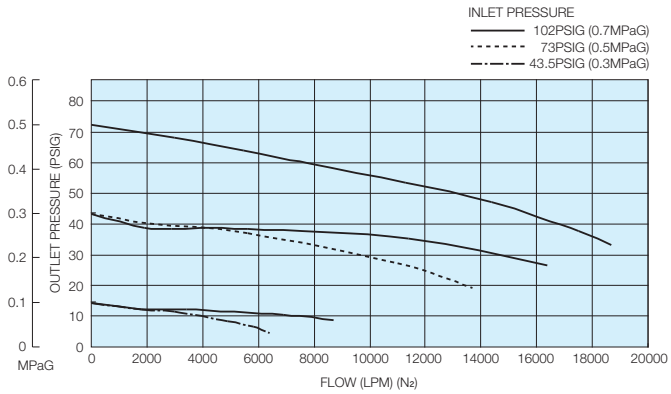

[NOTE]
· These tests were performed at ambient conditions.

Outline drawing

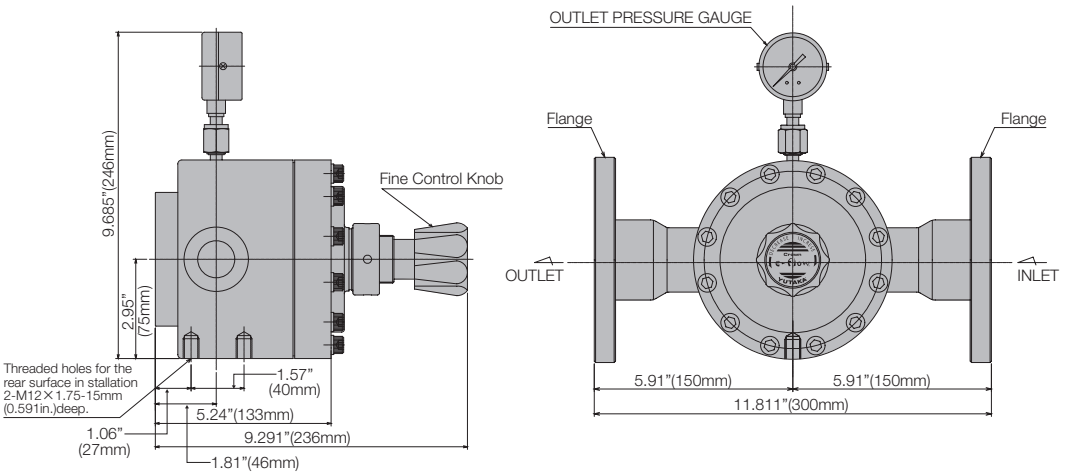

[NOTE]
- Dimensions are in inches and (mm) for reference only.
- Face to face length of the male and female are the same.
- Subject to change without notice.

Materials of construction

MODEL & TYPE	RLDSS
Wetted Parts	
Body	SUS316
Poppet & Seat Retainer	SUS316
Diaphragm	GYLON®
Seat	PTFE
Spring	SUS316
Gasket to seal for gauge	Ni
O-ring	VITON®
Non-wetted Parts	
Bonnet	SUS316
Control Knob	ABS Resin

Wetted surface finishes

Standard Ra (GRADE "C")	roughness on machined surface

Standard connections

JIS 10k-40A flange face to face length ..... **11.81in. (300mm)**

JIS 10k-50A flange face to face length ..... **11.81in. (300mm)**

[NOTE]
- Any combination of Face Seal male and/or female fittings are available for inlet and outlet.
- Size and configuration of pressure gauge port is 1/4" Face Seal male.

Ordering information

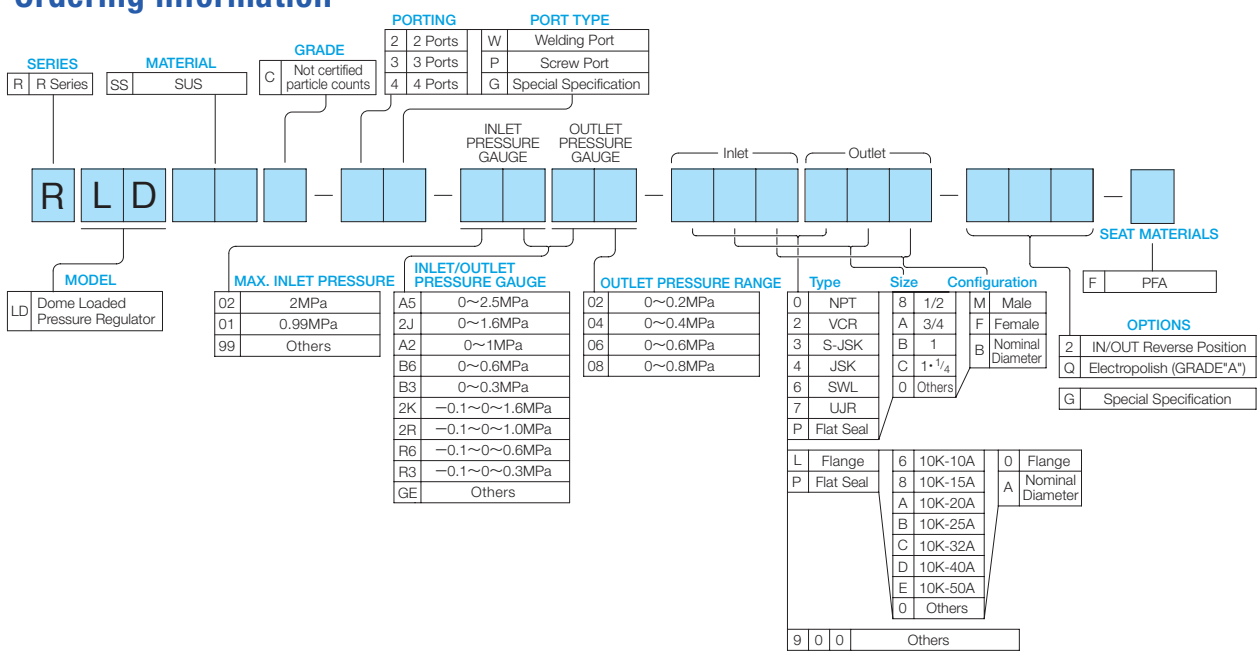

RH2-D Series

Point-of-Use Auto Pressure Regulator

Inlet Pressure	Max.2 MPaG (Max.290 PSIG)
Outlet Pressure	Max.0.99 MPaG (Max.144 PSIG) (Pressure Range: 0~0.2 MPa, 0~0.4 MPa, 0~0.6 MPa, 0~0.99 MPa)
Pressure controller	YP100
Power source	DC24 V ±10%
Power consumption	200 mA or less
External communication	4-20 mA, RS485
Pressure sensor input	4-20 mA, 1-5 V
Air supply pressure	0.4~0.6 MPa
Air supply pressure connection	0.157" (4.0 mm) Push-In Fitting

[NOTE]
1MPa = 10.2 kgf/cm^2 = 145.04 PSI
1MPa = 7504.36 mmHg = 295.4 inHg

Cross sectional drawing

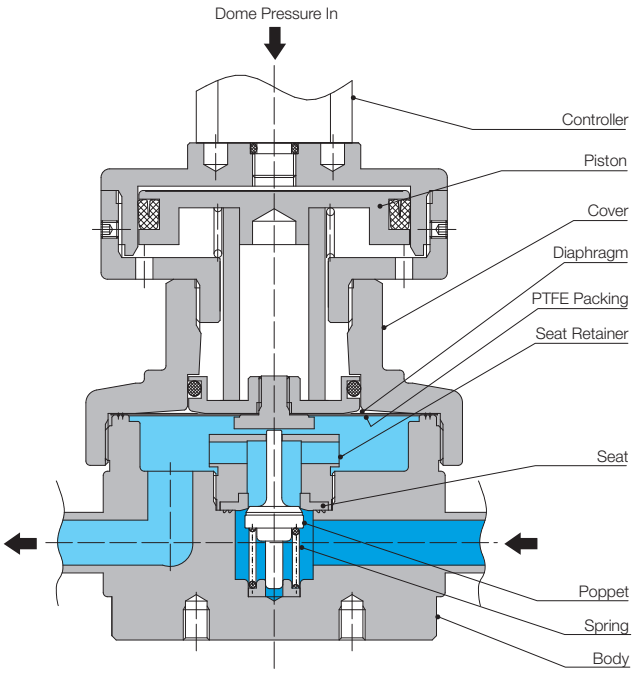

[NOTE]
· Avoid turning the control knob excessively.
· No filter in this unit.

Flow characteristics

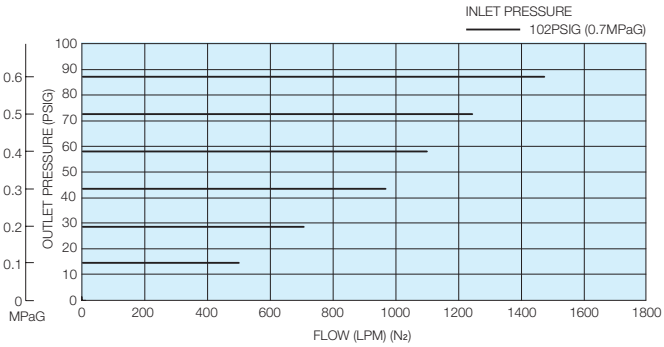

[NOTE]
· These tests were performed at ambient conditions.

Example of use

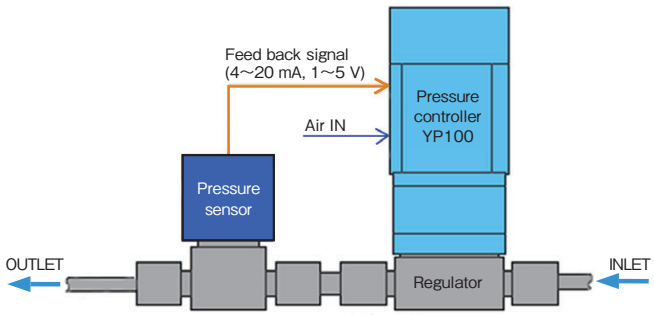

Outline drawing

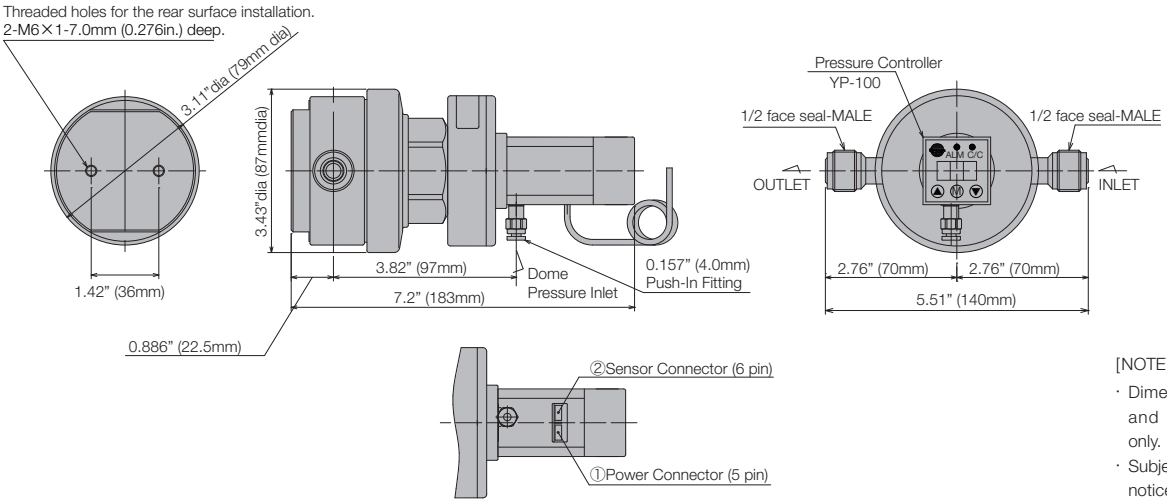

[NOTE]
- Dimensions are in inches and (mm) for reference only.
- Subject to change without notice.

Materials of construction

MODEL & TYPE	RH2SS-D
Wetted Parts	
Body	SUS316L
Poppet	SUS316L
Seat Retainer	SUS316L
Diaphragm	SUS316L
Seat	PCTFE
Spring	SUS316
Gasket to seal for gauge	Ni
Packing	PTFE
Non-wetted Parts	
Bonnet	C3604B
Pressure controller	YP100
O-ring	NBR

Wetted surface finishes

Optional Ra (GRADE "A")	7μin. (0.18μm) or less
Standard Ra (GRADE "B")	32μin. (0.80μm) or less

Standard connections

1/2" NPT body length 3.11in. (79mm)
3/8", 1/2" face to face length of the male and female are the same. 5.51in. (140mm)
1/2" sus tube fitting length 5.98in. (152mm)

[NOTE]
- Any combination of Face Seal male and/or female fittings are available for inlet and outlet.
- Size and configuration of pressure gauge port is 1/4" Face Seal male.

Ordering information

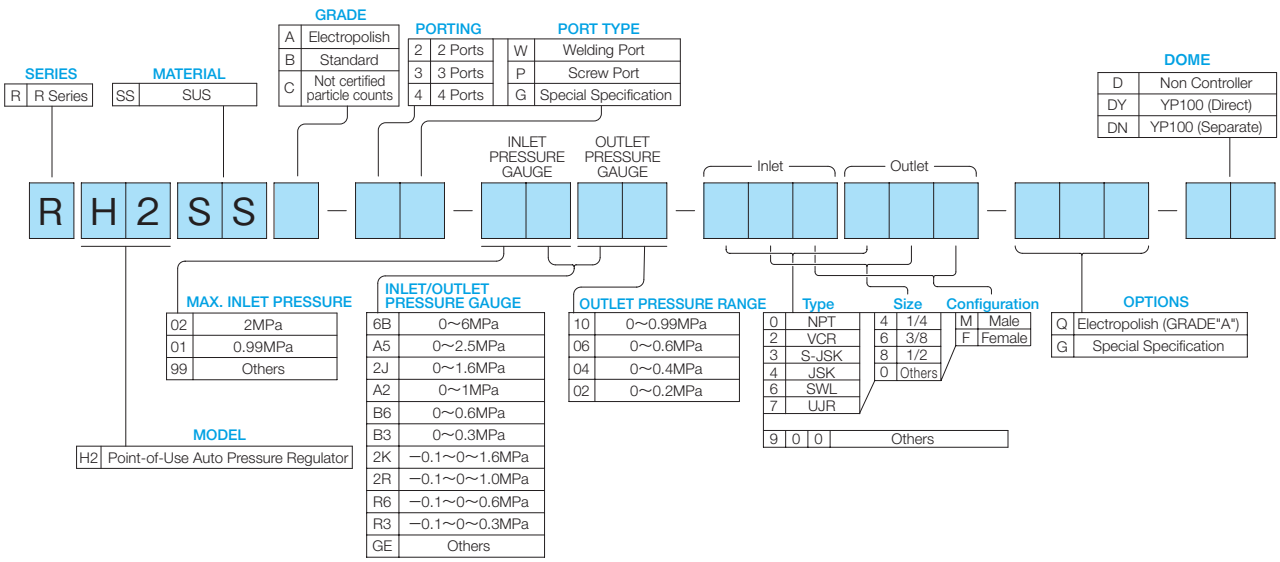

LM2-D Series

Point-of-Use Auto Pressure Regulator

Inlet Pressure	Max.2 MPaG (Max.290 PSIG)
Outlet Pressure	Max.0.8 MPaG (Max.116 PSIG) (Pressure Range: 0~0.2 MPa, 0~0.4 MPa, 0~0.6 MPa, 0~0.8 MPa)
Pressure controller	YP100
Power source	DC24 V ±10%
Power consumption	200 mA or less
External communication	4-20 mA, RS485
Pressure sensor input	4-20 mA, 1-5 V
Air supply pressure	0.4~0.6 MPa
Air supply pressure connection	0.157" (4.0 mm) Push-In Fitting

[NOTE]
1MPa = 10.2 kgf/cm^2 = 145.04 PSI
1MPa = 7504.36 mmHg = 295.4 inHg

Cross sectional drawing

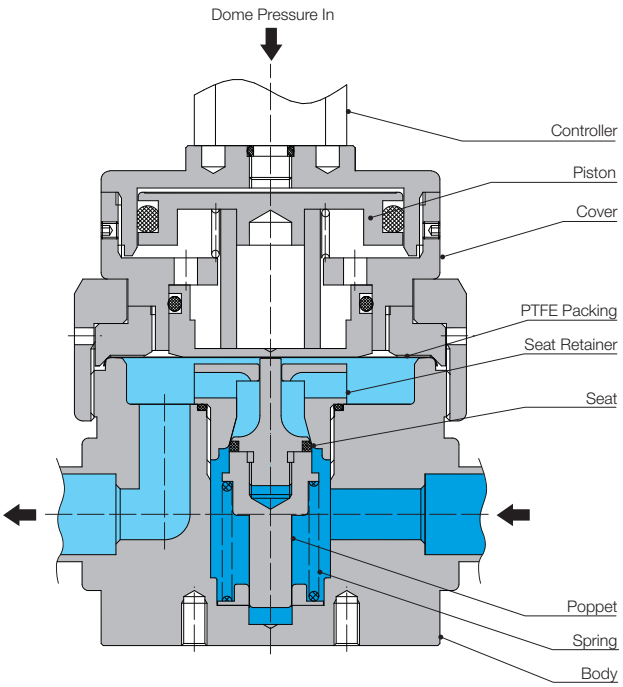

[NOTE]
· Avoid turning the control knob excessively.
· No filter in this unit.

Flow characteristics

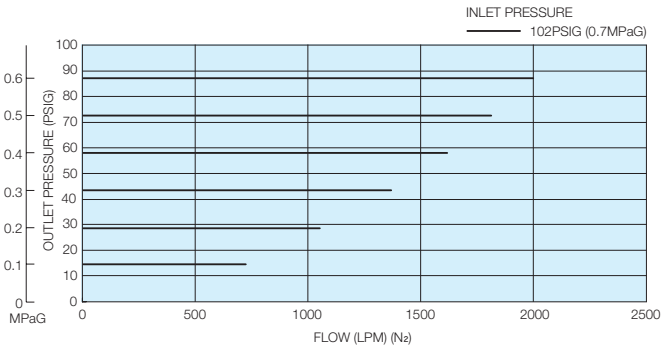

[NOTE]
· These tests were performed at ambient conditions.

Example of use

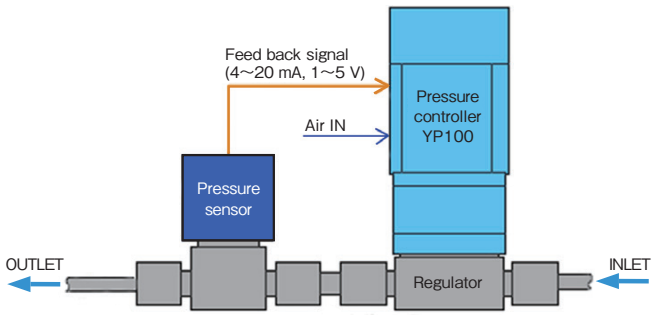

Outline drawing

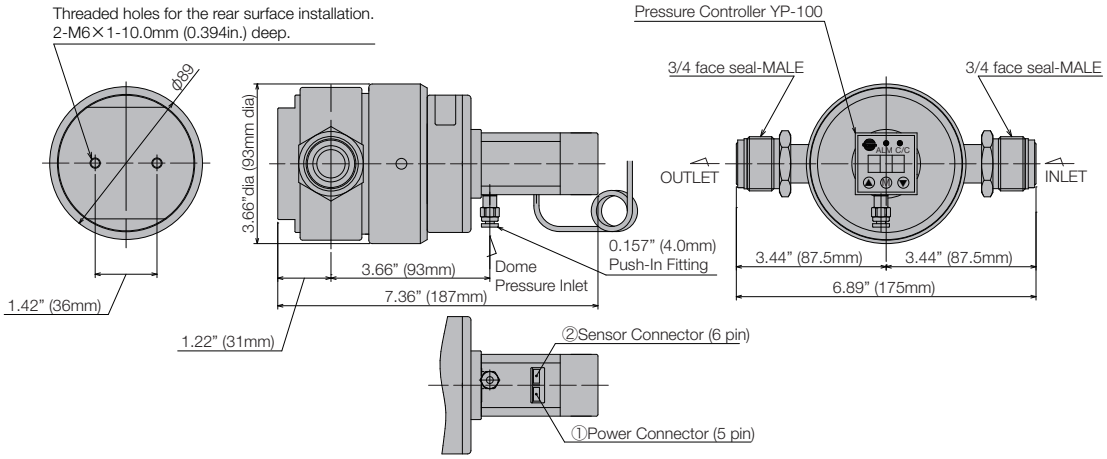

[NOTE]
- Dimensions are in inches and (mm) for reference only.
- Face to face length of the male and female are the same.
- Subject to change without notice.

Materials of construction

MODEL & TYPE	LM2-D
Wetted Parts	
Body	SUS316L
Poppet	SUS316L
Seat Retainer	SUS316L
Diaphragm (Metal to metal seal to atmosphere)	Hastelloy® C-22
Seat	PTFE
Spring	SUS316
Gasket to seal for gauge	Ni
Packing	PTFE
Non-wetted Parts	
Bonnet	C3604B
Pressure controller	YP100
O-ring	NBR

Wetted surface finishes

Standard Ra (GRADE "B")	32μin. (0.80μm) or less
Standard Ra (GRADE "C")	7μin. (0.18μm) or less

Standard connections

1/2" NPT body length 3.50in. (89mm)
3/4", 1/2" face to face length of the male and female are the same. 6.89in. (175mm)

[NOTE]
- Any combination of Face Seal male and/or female fittings are available for inlet and outlet.
- Size and configuration of pressure gauge port is 1/4" Face Seal male.

Ordering information

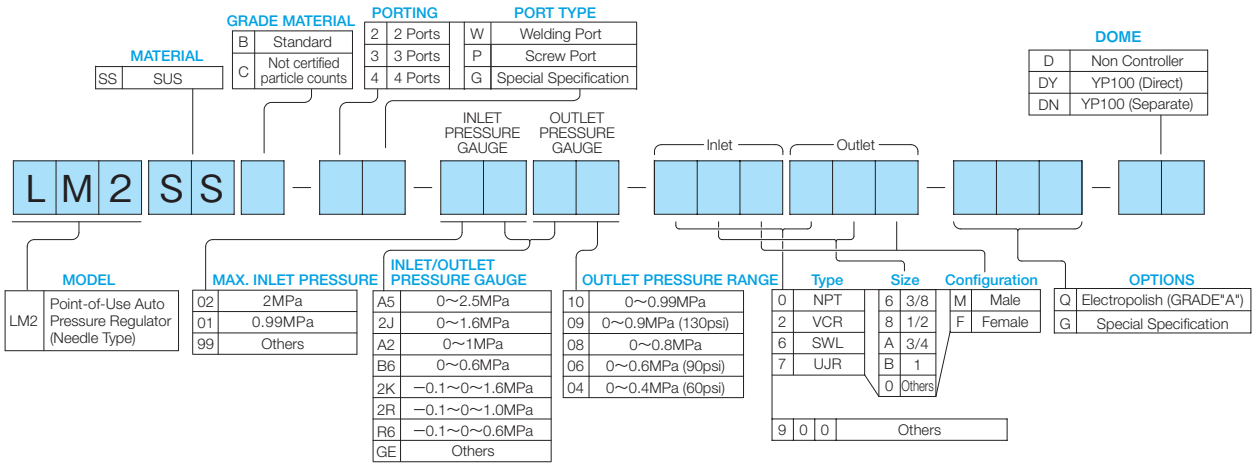

TOTAL ENGINEERING OF GAS REGULATING EQUIPMENT
YUTAKA ENGINEERING CORPORATION
ADDRESS : 5-17-5 KUGAHARA, OHTA-KU, TOKYO 146-0085, JAPAN
PHONE : 81-3-3753-1651 FAX : 81-3-3751-5177
http://www.yutaka-crown.com

ISO 9001 96QR-032
ISO 14001 00ER-073

ONLY OTA QUALITY
Member's No.0070

An ISO 9001 Quality System Certified Company
An ISO 14001 Environmental System Certified Company
MITI Certified Self-Inspecting Manufacturer(No.MAB-472)
MHW Certified Medical Equipment Manufacturer((東用)No.2755)

YUTAKA/Edupress Printing Printed in Japan

CAT.No.245 2018 10 (The Second edition) E